HD3L Series

Elevator Controller

User Manual

HD3L Series
Elevator Controller

V1.2 2020.04

FOREWORD

Thank you for purchasing HD3L series elevator controller manufactured by Shenzhen Hpmont Technology Co., Ltd.

This User Manual describes how to use HD3L series elevator controller and their installation wiring, parameter setting, troubleshooting and daily maintenance etc.

Before using the product, please read through this User Manual carefully. In addition, please do not use this product until you have fully understood safety precautions.

Note:

- Preserve this Manual for future use.
- If you need the User Manual due to damage, loss or other reasons, please contact the regional distributor of our company or directly contact our company Technical Service Center.
- If you still have some problems during use, please contact our company Technical Service Center.
- Due to product upgrade or specification change, and for the purpose of improving convenience and accuracy of this manual, this manual's contents may be modified.
- Email address: **marketing@hpmont.com**

Connection with Peripheral Devices

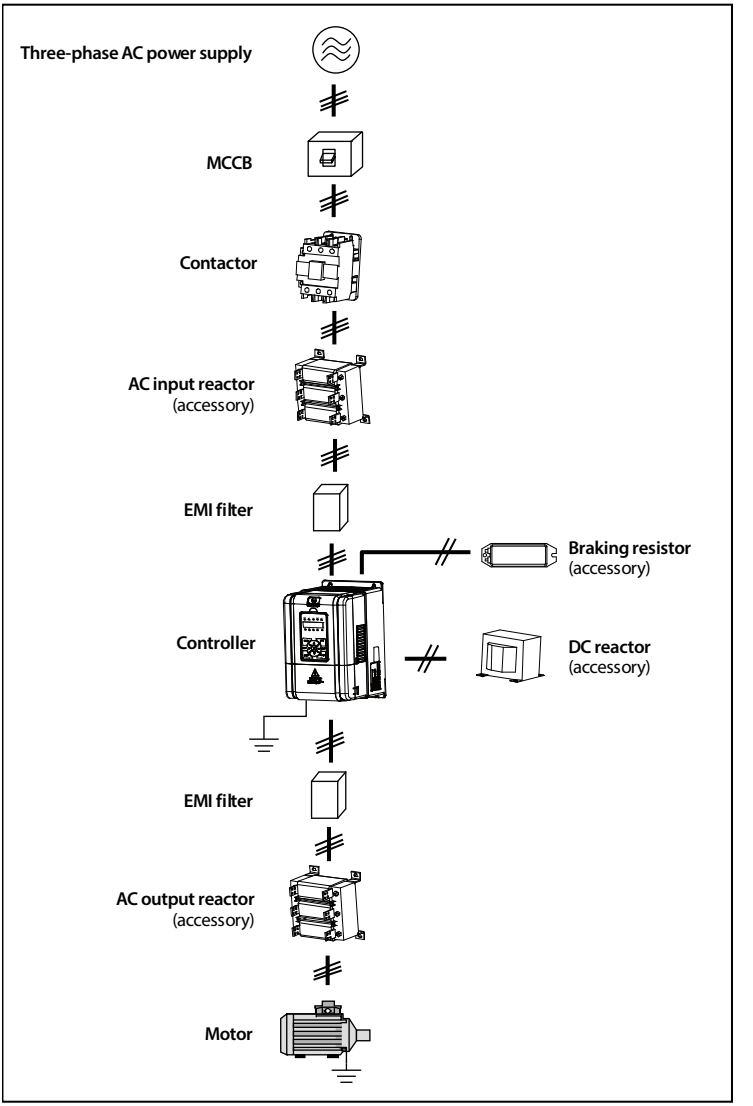

Version and Revision Records

Time: 2020/4

Version: V1.2

Revised Chapter	Revised Contents
Chapter 6 Appendix A	• Increase F00.01 (motor control mode): Functions 5, 6 • Add: Group F19 (enhance parameter group 1) • Add: Group F20 (enhance parameter group 2)

CONTENTS

Chapter 1 Safety Information and Precautions

1.1 Safety Definition

Danger
Danger: A Danger contains information which is critical for avoiding safety hazard.

Warning
Warning: A Warning contains information which is essential for avoiding a risk of damage to products or other equipements.

Note
Note: A Note contains information which helps to ensure correct operation of the product.

1.2 About Motor and Load

Compared to the Industrial Frequency Running

The HD3L series controllers are voltage-type frequency controllers and their output is PWM wave with certain harmonic wave. Therefore, the temperature, noise and vibration of the motor will be a little higher than that at industrial frequency running.

Thermal Protection of Motor

When choose the adaptive motor, HD3L can effectively implement thermal protection of motor. Otherwise it must adjust the motor protection parameters or other protection measures to ensure that the motor is at a safe and reliable running.

Lubrication of Mechanical Devices

At long time low-speed running, provide periodical lubrication maintenance for the mechanical devices such as gear box and geared motor etc. to make sure the drive results meet the site need.

Start and Stop HD3L

User should use the control terminal to start and stop HD3L. It is strictly forbidden to use contactor or other switches on the input side of HD3L to start and stop directly, or it will damage the device.

Check the Insulation of the Motor

For the first time using the motor or after long time storage, it needs checking the insulation of the motor. Worse insulation can cause damage to HD3L.

Note:

Use a 500V Mega-Ohm-Meter to test and the insulation resistance must be higher than 5M ohm.

Requirement for Leakage Current Protector RCD

Since the device generates high leakage current which goes through the protective grounding conductor, please install B type leakage current protector RCD on one side of the power supply.

For the selection of RCD, users need to consider the possible problems of ground leakage current in both transient status and steady status at start and during running. It is recommended to choose either special RCD that can suppress the higher harmonics, or general RCD that has more aftercurrent.

Warning for Ground Mass Leakage Current

The device generates mass leakage current, so users need to confirm the reliable grounding before connect to the power supply. The grounding should comply with the local relative IEC standard.

1.3 About HD3L

No Capacitor or Varistor on the Output Side

Since HD3L output is PWM wave, it is strictly forbidden to connect capacitor for improving the power factor or varistor for lightning protection to the output terminals so as to avoid HD3L fault trip or component damage.

Contactors and Circuit Breakers Connected to the Output of HD3L

If circuit breaker or contactor needs to be connected between HD3L and the motor, be sure to operate these circuit breakers or contactor when HD3L has no output, so as to avoid any damage to HD3L.

Running Voltage

HD3L is prohibited to be used beyond the specified range of running voltage. If needed, please use suitable voltage regulation device to change the voltage.

Capacitor Energy Storage

When the AC power supply is cut off, capacitor of HD3L sustains deadly power for a while. So to disassemble HD3L that is powered, please cut off the AC power supply for more than 10 minutes, confirm the internal charge indicator is off and the voltage between (+) and (-) of the main circuit terminals is below 36V.

Generally, the internal circuit enables the capacitor to discharge. However, the discharging may fail in some exceptions. In these cases, users need to consult Hpmont or our regional distributor.

Change Three-phase Input to Single-phase Input

For three-phase input controller, users should not change it to be single-phase input.

To use single-phase power supply, disable the input phase-loss protection function. And the bus-voltage and current ripple will increase, which not only influences the life of electrolytic capacitor but also deteriorates the performance of the controller. In that case, the controller must be derating and should be 60% within rated value of controller.

Lightning Surge Protection

HD3L internal design has lightning surge over-current protection circuit, and has certain self-protection capacity against the lightning.

Altitude and Derating

In area where altitude exceeds 1000 meters, HD3L should be derating since the heatsink efficiency will be reduced because of the tenuous air.

The rated value of output current derates by 1% for each 100m increase of the altitude. I.e. for the altitude of 4000m, derated rate is 30% for rated current of HD3L. Figure 1–1 is the derating curve of rated current and the altitude.

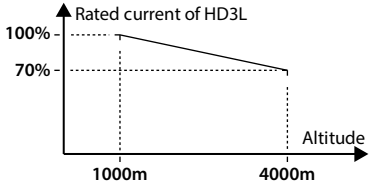

Figure 1–1 Derating curve of rated current and altitude

Chapter 2 Product Information

2.1 Model

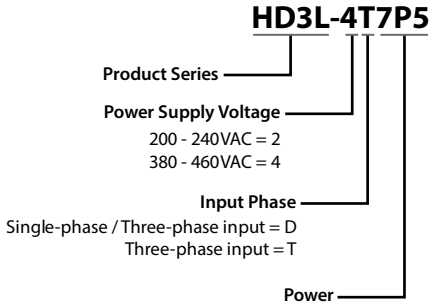

2.2 Nameplate

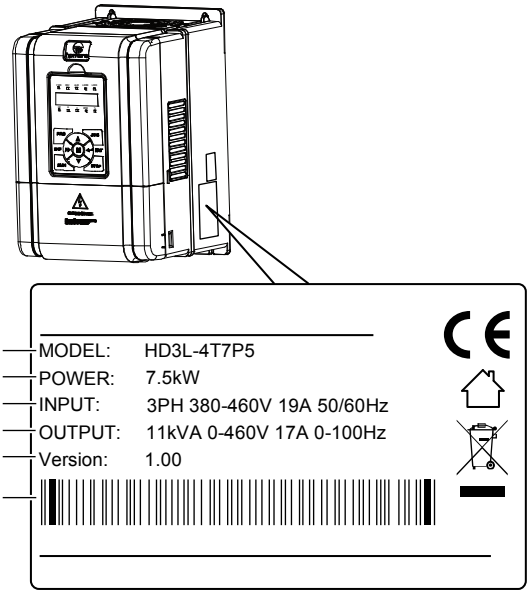

2.3 Rated Value

Refer to section 3.4 Dimensions and Weight (on page 12) for size information.

Model	Motor (kW)	Rated Capacity (kVA)	Rated Input Current (A)	Rated Output Current (A)	Size
Single-phase/three-phase power supply: 200 - 240V, 50/60Hz					
HD3L-2D2P2	2.2	3.8	24.1/12 (1)	10	F2
HD3L-2D3P7	3.7	5.9	40/19 (1)	17	F2
HD3L-2D5P5	5.5	8.5	60/28 (1)	25	F3
HD3L-2D7P5	7.5	11	75/35 (1)	32	F3
HD3L-2D011	11	16	100/47 (1)	45	F4
Three-phase power supply: 200 - 240V, 50/60Hz					
HD3L-2T015	15	21	62	55	F5
HD3L-2T018	18.5	24	77	70	F5
HD3L-2T022	22	30	92	80	F6
HD3L-2T030	30	39	113	110	F6
Three-phase power supply: 380 - 460V, 50/60Hz					
HD3L-4T2P2	2.2	3.4	7.3	5.1	F2
HD3L-4T3P7	3.7	5.9	11.9	9.0	F2
HD3L-4T5P5	5.5	8.5	15	13	F2
HD3L-4T7P5	7.5	11	19	17	F3
HD3L-4T011	11	16	28	25	F3
HD3L-4T015	15	21	35	32	F4
HD3L-4T018	18.5	24	39	37	F4
HD3L-4T022	22	30	47	45	F5
HD3L-4T030	30	39	62	60	F5
HD3L-4T037	37	49	77	75	F6
HD3L-4T045	45	59	92	90	F6
(1): Value before / is for single-phase model, value after / is for three-phase model.					

2.4 Technical Data

Electrical	
Input voltage	Single-phase/three-phase: 200 - 240V Three-phase: 200 - 240V Three-phase: 380 - 460V Fluctuating within ±10%, unbalance rate <3%
Input frequency	50/60Hz ± 5%
Output voltage	0V - input voltage
Output frequency	0 - 100.00Hz
Performance	
Control mode	V/f, SVC
Max. current	150% rated output current for 2 minutes 180% rated output current for 10 seconds
Running command	Keypad; Terminals
Speed setting	Digital; Analogue
Speed resulotion	Digital setting: 0.01Hz Analogue setting: 0.1% × max-frequency
SVC	Speed control accuracy: ±0.5% Speed control range: 1:100 Torque control response: <200ms Start torque: 180% rated torque/0.5Hz
Characteristic Functions	
Parameter upload and download function	Achieve parameters uploading and downloading
I/O interface	The programmable input interface has up to 34 functions The pragrammable output interface has up to 19 functions
Communication protocol	Built-in Modbus communication protocol
Protection Functions	
Auto-inspection	To eliminate the potential safety problems, safety inspection for the peripheral devices is provided when power on
Over-speed protection	To make sure safe running, elevator over-speed protection is provided
Speed deviation protection	To eliminate the potential safety problems, speed deviation detection protection is provided
Up/down forced speed switch function	Up/down forced speed switch function, to avoid climbing elevator or plunging elevator
Input/output voltage phase loss protection	Input/output voltage phase loss auto-detect and alarm function
Motor temperature detection	Real time detection for the motor temperature
Output GND short circuit protection	Enabled
Output inter-phase short circuit protection	Enabled

Input/Output	
Analogue power supply	+10V, max. current 100mA
Digital power supply	+24V, max. current 200mA
Analogue input	AI1 (control board): Voltage 0 - 10V AI2 (control board): -10 - +10V/0 - 20mA (selectable voltage/current) AI3, AI4 (I/O board): -10 - +10V/0 - 20mA (selectable voltage/current; AI4 supports differential input)
Analogue output	AO1, AO2: 0 - 10V/0 - 20mA (selectable voltage/current)
Digital input	DI1 - DI6 (control board); DI7 - DI9 (I/O board)
Digital output	DO1, DO2
Relay output	R1A/R1B/R1C (control board) R2A/R2B/R2C, R3A/R3B/R3C, R4A/R4B/R4C (I/O board) Contact rating 250VAC/3A or 30VDC/1A
Communication	
SCI communication	RS-485 interface; Terminal
Keypad	
LED display	Five LEDs display Setting function parameter, checking status parameters, checking fault code, etc.
Indicators	5 unit indicators, 5 status indicators
Parameter copy	Achieve quick parameter copy
Environment	
Running temperature	-10 - +40℃, max. 50℃, air temperature fluctuation is less than 0.5℃/min The derating value of output current of HD3L shall be 2% for each degree centigrade above 40℃. Max. allowed temperature is 50℃
Storage temperature	-40 - +70℃
Location for use	Indoor, preventing from direct sunlight, no dust, corrosive, flammable gases, oil mist, water vaper, dripping or salt etc.
Altitude	Less than 1000 meters, otherwise should be derating use
Humidity	Less than 95%RH, non-condensing
Oscillation	Less than 5.9m/s^2 (0.6g)
Protection class	IP20
Pollution level	Level 2 (dry, non conducting dust pollution)
Accessories	
About keypad	Mounting base to keypad [HD-KMB] 1m/2m/3m/6m extenion cable to keypad [HD-CAB-1M/2M/3M/6M]
Power unit	Power regenerative unit [HDRU]

2.5 Parts of HD3L

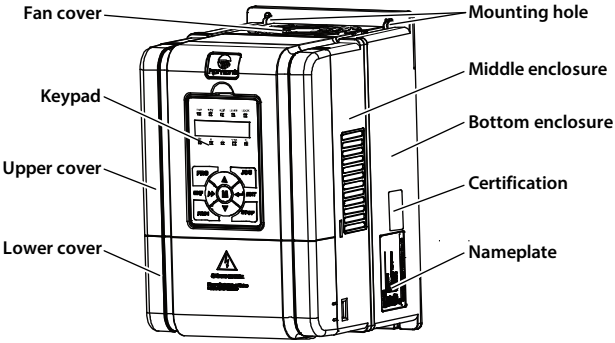

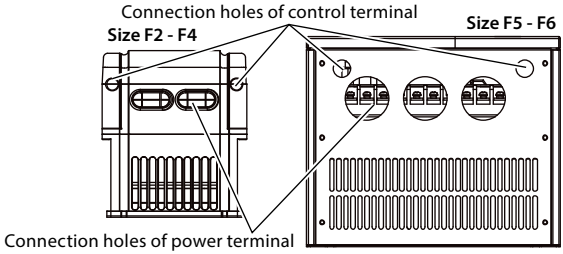

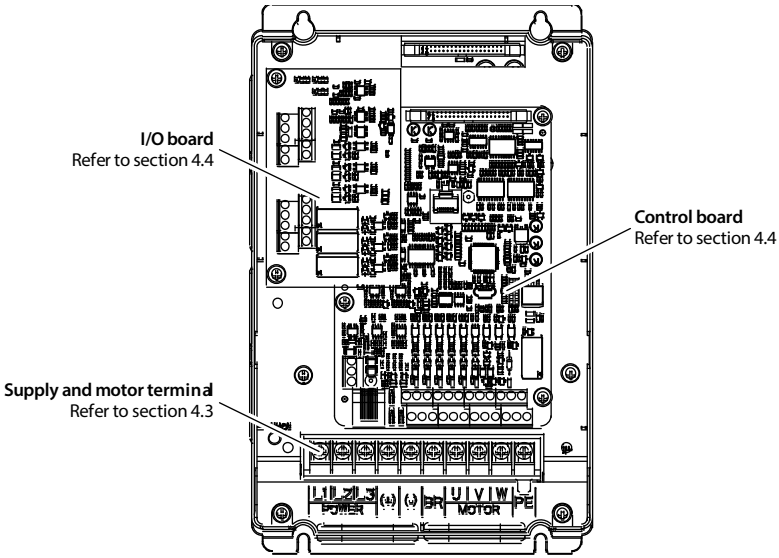

Chapter 3 Mechanical Installation

3.1 Precautions

Danger

- Do not install if HD3L is incomplete or impaired.
- When conveying HD3L, please employ suitable tools according to its weight. Avoid scratch to the product. Be careful: Rollover and drop may cause hurt.
- Make sure that HD3L is far from explosive and flammable things.
- Do not do wiring operation until power supply is cut off for more than 10 minutes, the internal charge indicator of HD3L is off and the voltage between (+) and (-) of the main circuit terminals is below 36V.

Warning

- It is required not only carry the keypad and the cover but also bottom enclosure of HD3L.
- Do not let wires, screws or residues fall into HD3L when installing.

3.2 Installation Site Requirement

Ensure the installation site meets the following requirements:

- Do not install at direct sunlight, moisture, water droplet location;
- Do not install at flammable, explosive, corrosive gas and liquid location;
- Do not install at oily dust, fiber and metal powder location;
- Be vertical installed on fire-retardant material with a strong support;
- Make sure adequate cooling space for HD3L so as to keep ambient temperature between -10 - +40℃;
- Install at where the vibration is 3.5m/s^2 in 2 - 9Hz, 10m/s^2 in 9 - 200Hz (IEC60721-3-3);
- Install at where the humidity is less than 95%RH and non-condensing location;
- HD3L meets IP20 and pollution level 2 (dry, none conducting dust pollution).

Note:

1. It needs derating use if running temperature exceeds 40℃. The derating value of the output current of HD3L shall be 2% for each degree centigrade. Max. allowed temperature is 50℃.

2. Keep ambient temperature between -10 - +40℃. It can improve the running performance if install at location with good ventilation or cooling devices.

3.3 Installation Direction and Space Requirements

To achieve good cooling efficiency, install HD3L perpendicularly and always provide the following space to allow normal heat dissipation.

The requirements on mounting space and clearance are shown in Figure 3–1, the unit is mm.

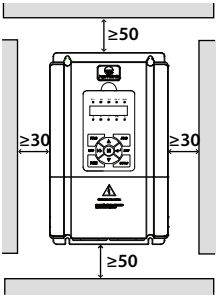

Figure 3–1 HD3L installation

3.4 Dimensions and Weight

The dimensions and weight of HD3L are as shown in figure Table 3-1. For the corresponding model of the mounting size, please refer to section 2.3 Rated Value, on page 6.

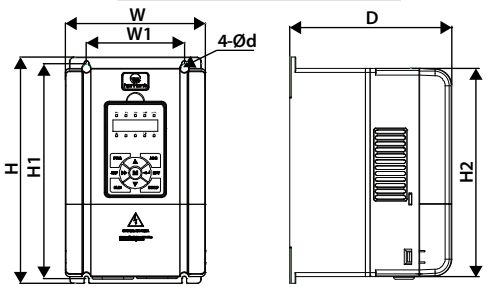

Size F2 - F4

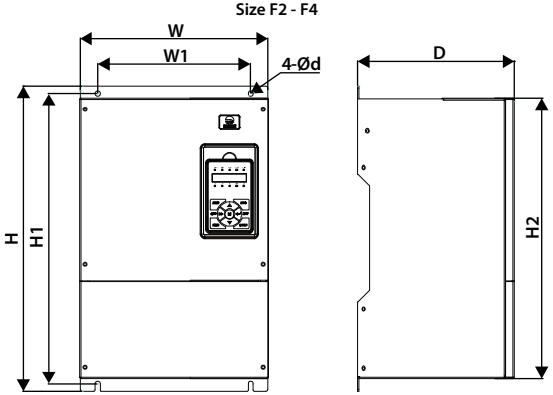

Size F5 - F6

Table 3-1 HD3L dimensions and weight

Size	Dimension (mm)			Mounting Size (mm)				GW
	W	H	D	W1	H1	H2	d	(kg)
F2	165	266	190	115	253	245	5	4.4
F3	200	299	210	146	286	280	5	5.8
F4	235	353	222	167	337	330	7	8.2
F5	290	469	240	235	445	430	8	20.4
F6	380	598	290	260	576	550	10	48

3.5 Install and Dismantle Keypad

According to the direction of Figure 3–2, press the keypad until hear a “click” sound.

Do not install the keypad from other directions or it will cause poor contact.

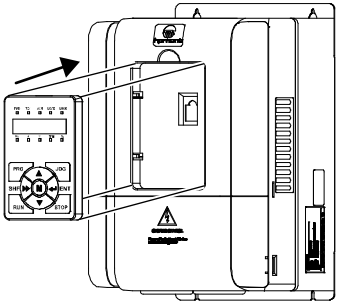

Figure 3–2 Install keypad

There are two steps in Figure 3–3.

First, press the hook of the keypad according to direction 1. Second, take out of the keypad according to direction 2.

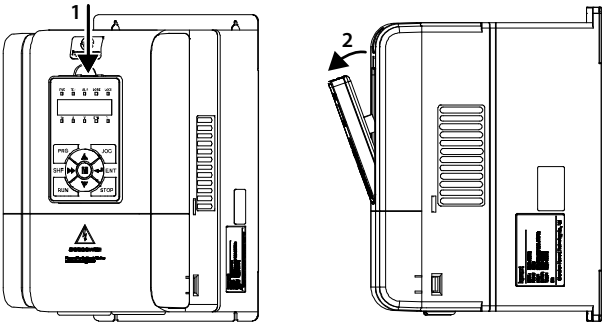

Figure 3–3 Dismantle keypad

3.6 Dismantle Plastic Cover

The upper cover and lower cover of HD3L are removable. The dismantle steps are shown as Figure 3–4.

Before removing the upper cover, please take away the keypad.

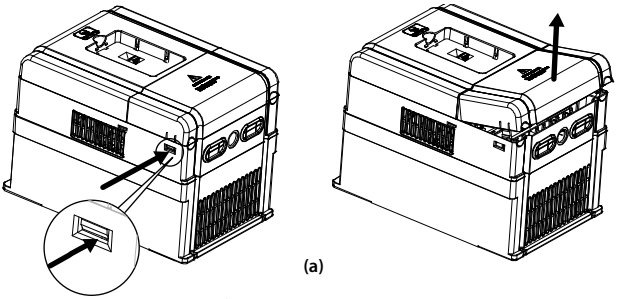

(a)

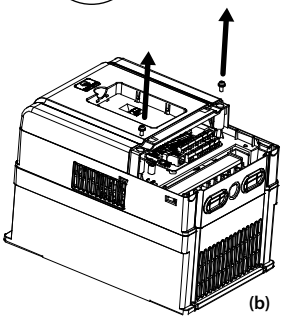

(b)

The removing processes of plastic cover board:

1. Extrude the hooks at both sides together, take off the lower cover, as (a).
2. Dismantle the screws of upper cover, as (b).
3. Extrude the hooks at both sides together, take off the upper cover, as (c).

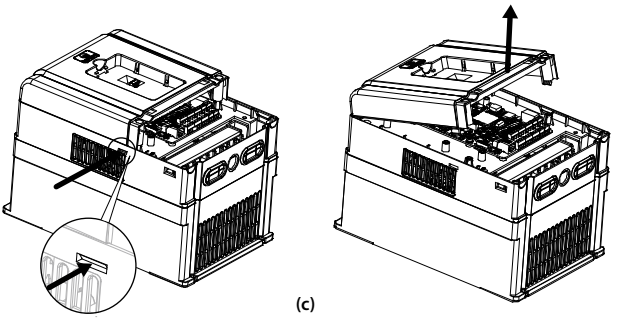

(c)

Figure 3–4 Dismantle plastic cover

Chapter 4 Electrical Installation

4.1 Precautions

Danger

- Only qualified electrical engineer can perform wiring job.
- To facilitate the input side over-current protection and outage maintenance, connect HD3L with power supply via the MCCB or fuse.
- Do not dismantle HD3L or do wiring operation until the power is cut-off for more than 10 minutes, the internal charge indicator of HD3L is off and the voltage between (+) and (-) of the main circuit terminals is below 36V.
- Check the wiring carefully before connecting emergency stop or safety circuit.
- There is more than 3mA leakage current in HD3L grounding, depending on the operating conditions. To ensure safety, HD3L and the motor must connect to separate and independent grounding wire, so as to ground reliably. It must use type B mode when utilize ground leakage protection devices (ELCB/RCD).
- Do not touch the wire terminals of HD3L when it is live. The main circuit terminals are neither allowed connecting to the enclosure nor short-circuiting.

Warning

- Do not do dielectric strength test on HD3L.
- For HD3L with more than 2 year's storage, please use regulator to power it slowly.
- Do wiring connection of the braking resistor or the braking unit according to the wiring figure.
- Make sure the terminals are fixed tightly.
- Do not connect the AC supply cable to the output terminals U/V/W of HD3L.
- Do not connect the phase-shifting capacitors to the output circuit.
- Be sure HD3L has ceased output before switching motor or change-over switches.
- The HD3L DC bus terminals must not be short-circuited.

4.2 Peripheral Accessories Selection

4.2.1 Wiring Specifications of Input and Output

The AC supply to HD3L must be installed with suitable protection against overload and short-circuits, i.e. MCCB (molded case circuit breaker) or equivalent device.

The recommended specification of MCCB, contactor & cables are shown as Table 4-2.

The size of ground wire should accord with the requirement in 4.3.5.4 of IEC61800-5-1, as shown in Table 4-1.

Table 4-1 Sectional area of ground protective conductor

Sectional Area S of Phase Conductor (Supply Cable) While Installing (mm^2)	$S \le 2.5$	$2.5 < S \le 16$	$16 < S \le 35$	$S > 35$
Min. Sectional Area Sp of Relative Protective Conductor (Ground Cable) (mm^2)	2.5	S	16	S/2

Table 4-2 HD3L I/O wiring specification

Model	MCCB (A)	Contactor (A)	Power Cable (mm^2)	Motor Cable (mm^2)	Ground Cable (mm^2)	Size
Single-phase/three-phase power supply: 200 - 240V, 50/60Hz						
HD3L-2D2P2	32	20	6/2.5 (1)	2.5	6/2.5 (1)	F2
HD3L-2D3P7	63	32	10/4 (1)	4	10/4 (1)	F2
HD3L-2D5P5	32	20	25/6 (1)	6	16/6 (1)	F3
HD3L-2D7P5	100/40 (1)	63/32 (1)	25/10 (1)	10	16/10 (1)	F3
HD3L-2D011	125/63 (1)	100/40 (1)	25/16 (1)	16	16	F4
Three-phase power supply: 200 - 240V, 50/60Hz						
HD3L-2T015	125	100	25	16	16	F5
HD3L-2T018	160	100	25	25	16	F5
HD3L-2T022	200	125	35	35	16	F6
HD3L-2T030	200	125	50	35	25	F6
Three-phase power supply: 380 - 460V, 50/60Hz						
HD3L-4T2P2	16	10	1.5	0.75	2.5	F2
HD3L-4T3P7	25	16	2.5	1.5	2.5	F2
HD3L-4T5P5	32	25	2.5	2.5	2.5	F2
HD3L-4T7P5	40	32	4.0	4	2.5	F3
HD3L-4T011	63	40	6.0	6	2.5	F3
HD3L-4T015	63	40	6.0	10	2.5	F4
HD3L-4T018	100	63	10	10	2.5	F4
HD3L-4T022	100	63	16	16	16	F5
HD3L-4T030	125	100	25	25	16	F5
HD3L-4T037	160	100	25	35	16	F6
HD3L-4T045	200	125	35	35	16	F6
(1): Value before / is for single-phase model, value after / is for three-phase model.						

4.2.2 Power Terminal Lug

Select the lug of power terminal according to the size of terminal, screw size and max. outer diameter of lug. Refer to Table 4-3.

Take the round terminal as an example.

Table 4-3 Selection of power terminal lug

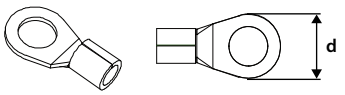

Size	F2	F3/F4	F5	F6
Screw Size	M4	M5	M6	M8
Tightening Torque (N. M)	1.2 - 1.5	2.5 - 3.0	4.0 - 5.0	9.0 - 10.0
Max. Outer Diameter of Lug d (mm)	9.9	12	15.5	24

4.3 Main Circuit

Danger

- The bare portions of the power cables must be bound with insulation tapes.

Warning

- Ensure that AC supply voltage is the same as rated input voltage of HD3L.

4.3.1 Supply and Motor Terminal

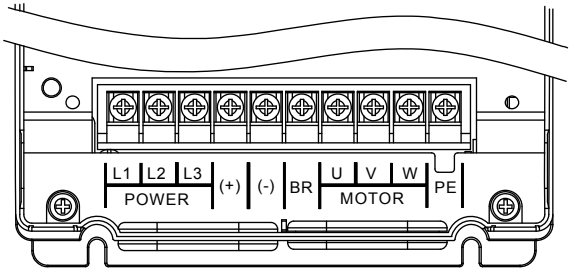

Figure 4–1 Size F2

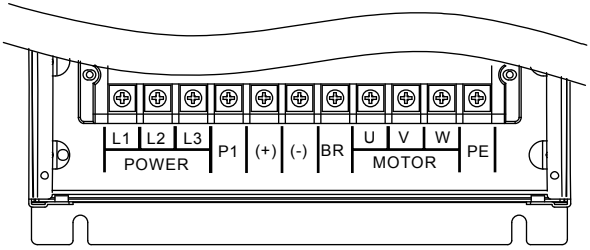

Figure 4–2 Size F3 - F6

Table 4-4 HD3L supply and motor terminal description

Terminal	Description
L1, L2, L3	Three-phase AC power input terminals
U, V, W	Output terminals, connect to three-phase AC motor
P1, (+)	DC reactor connection terminals
(+), (-)	DC supply input terminals; DC input terminals of power regenerative unit
(+), BR	Braking resistor connection terminals
PE	Ground terminal, connect to the ground

4.3.2 Supply and Motor Connection

During trial running, make sure that the elevator will go up when the UP command is enabled.

If the elevator goes down, set F00.08 (running direction) = 1.

The supply and motor connection are shown as Figure 4–3.

- For selection of contactor, MCCB, power cable, motor cable and ground cable, refer to section 4.2 Peripheral Accessories Selection (on page 15).
- Refer to section 9.3 Braking Resistor (on page 86) for braking resistors.
- Refer to section 9.2 Reactor Selection (on page 85) for AC reactors and DC reactors.

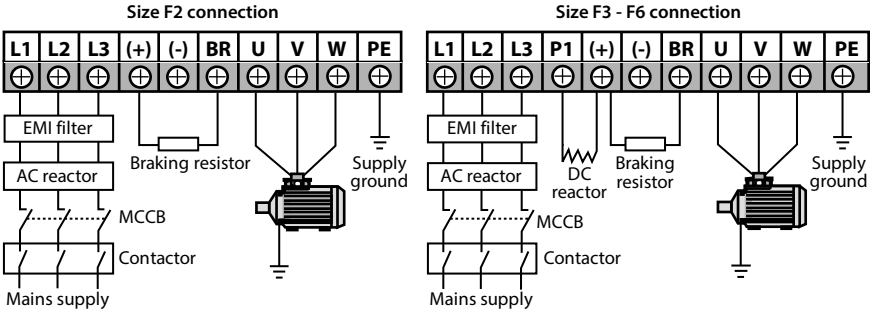

Figure 4–3 Supply and motor connection

4.4 Control Board and I/O Board

Danger

- The control circuit and power circuit are basically insulated. Do not touch HD3L after it is powered.

Warning

- If the control circuit is connected to the external devices with live touchable port, it should increase an additional isolating barrier to ensure that classification of external devices not be changed.
- If connect the communication terminal of the control circuit to the PC, choose the RS485/232 isolating converter which meets the safety requirement.
- Only connect the relay terminal to AC 220V voltage signal. Other control terminals are strictly forbiden for this connection.

4.4.1 Control Board Terminal

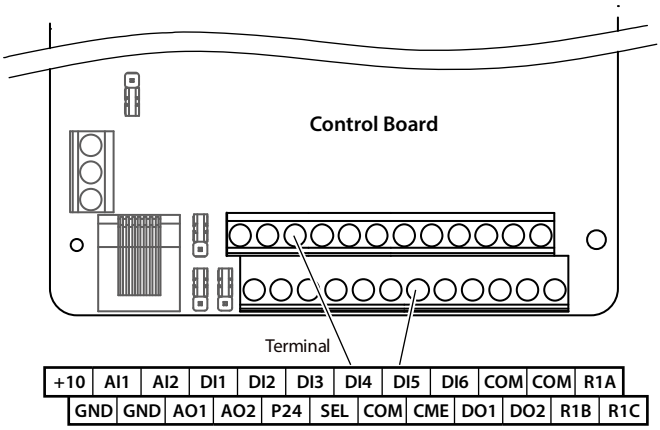

Figure 4–4 Control board terminals

Table 4-5 Control board terminal description

Terminal		Description
+10, GND	Analogue power supply	Analogue input use +10V power supply, max. output current is 100mA GND is isolated to COM
AI1, AI2	Analogue input	AI1 Input voltage: 0 - 10V (input impedance: 32kΩ) AI2 Input voltage: -10 - +10V (input impedance: 32kΩ) AI2 Input current: 0 - 20mA (input impedance: 500Ω) • AI2 can select input voltage/current
AO1, AO2	Analogue output	Output voltage/current signal: 0 - 10V/0 - 20mA Programmable output
GND	Analogue ground	
DI1 - DI6	Digital input	Programmable bipolar optional input signal Input voltage: 0 - 30VDC DI1 - DI5 input impedance 4.7kΩ, DI6 input impedance 1.6kΩ • DI6 can be selectable for high-frequency input, max-frequency 50kHz
P24, COM	Digital power supply	Digital input +24V power supply, max. output current is 200mA COM is isolated to CME
SEL	Digital input common terminal	SEL and P24 are connected by default • Disconnected SEL and P24 when use external power to drive DI
DO1, CME	Digital output	Programmable optical-couple isolation, open collector output Output voltage: 0 - 30VDC, max-output current 50mA CME is isolated to COM, connected to COM by default • Disconnect CME and COM when they are isolating output
DO2, COM		
R1A/R1B/R1C	Relay output	Programmable output, contact rating: 250VAC/3A or 30VDC/1A • R1B, R1C: Normally closed; R1A, R1C: Normally open

Note:

Limit the current within 3A if the relay terminal is to connect to AC 220V voltage signal.

4.4.2 I/O Board Terminal

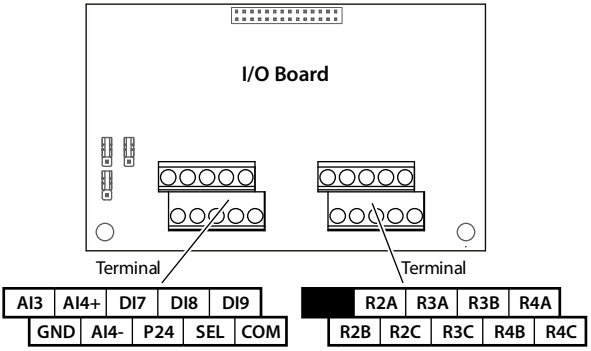

Figure 4–5 I/O board terminals

Table 4-6 I/O board terminal description

Terminal		Description
AI3	Analogue input	Input voltage/current selectable Input voltage: -10 - +10V (AI3 input impedance 32kΩ; AI4 input impedance 34kΩ) Input current: 0 - 20mA (input impedance: 500Ω)
AI4+/AI4-	Analogue difference input	
GND	Analogue ground	GND isolated with COM
DI7 - DI9	Digital input	Programmable bipolar optional input signal Input voltage: 0 - 30VDC (input impedance: 4.7kΩ)
P24, COM	Digital power supply	Digital input use +24V as supply, max. output current is 200mA
SEL	Digital input common terminal	SEL and P24 are connected by default • Disconnected SEL and P24 when use external power to drive DI7 - DI9
R2A/R2B/R2C R3A/R3B/R3C R4A/R4B/R4C	Relay output	Programmable output, contact rating: 250VAC/3A or 30VDC/1A • RB, RC: Normally closed; RA, RC: Normally open

Note:

Limit the current within 3A if the relay terminal is to connect to AC 220V voltage signal.

4.4.3 Modbus Communication Terminal

Do not use communication terminal and RJ45 simultaneously.

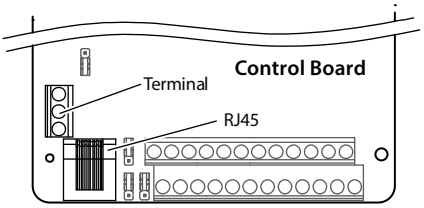

Terminal	Description
A	485+
B	485-

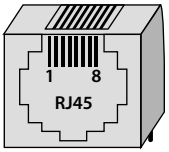

Pin	Difinition
1, 3	+5V
2	485+
4, 5, 6	GND
7	485-
8	Unused

4.4.4 Jumper

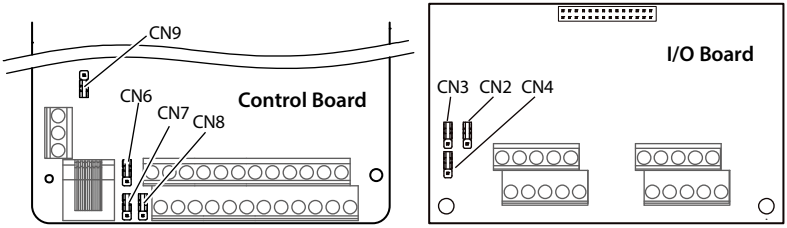

Figure 4–6 Jumper position

Table 4-7 Jumper description

Jumper	Description
Control board CN6 	AI2 can select voltage or current signal. • Pin 1&2 are short-connected, AI2 inputs voltage signal (factory setting). • Pin 2&3 are short-connected, AI2 inputs current signal.
Control board CN7 	AO1 can select voltage or current signal. • Pin 1&2 are short-connected, AO1 outputs voltage signal (factory setting). • Pin 2&3 are short-connected, AO1 outputs current signal.
Control board CN8 	AO2 can select voltage or current signal. • Pin 1&2 are short-connected, AO2 outputs voltage signal (factory setting). • Pin 2&3 are short-connected, AO2 outputs current signal.
Control board CN9 	SCI communication can select proper resistance. • Pin 1&2 are short-connected, select the proper resistance. • Pin 2&3 are short-connected, no resistance (factory setting).
I/O board CN2 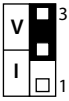	AI3 can select voltage or current signal. • Pin 1&2 are short-connected, AI3 inputs current signal. • Pin 2&3 are short-connected, AI3 inputs voltage signal (factory setting).
I/O board CN3 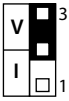	AI4 can select voltage or current signal. • Pin 1&2 are short-connected, AI4 inputs current signal. • Pin 2&3 are short-connected, AI4 inputs voltage signal (factory setting). *Note: Pin 2&3 of CN4 need to be short-connected.*
I/O board CN4 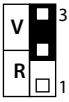	AI4 can select thermistor. • Pin 1&2 are short-connected, AI4 can connect to external thermistor, and serves as motor overheat detection signal input. • Pin 2&3 are short-connected, AI4 inputs user setting analogue (factory setting).

4

4.4.5 Connection

To reduce the interference and attenuation of control signal, length of control cable should limit within 50m. There should be more than 0.3m between the control cable and the motor cable.

The control cable must be shielded cable. The analogue signal cable must be shielded twisted pair.

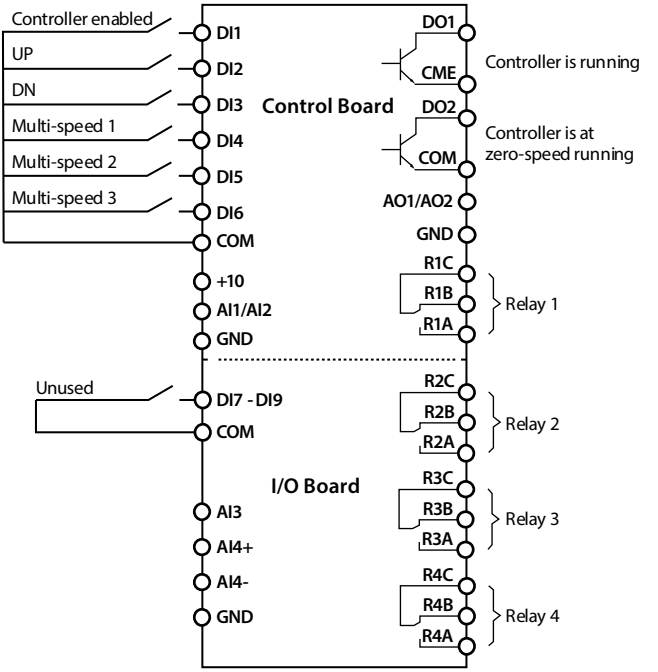

Figure 4–7 HD3L connection

Digital Input Connection

Dry Contact

Using the internal 24V power supply (SEL and P24 are short-connected at factory) or external power supply (remove the connector between SEL and P24), their connections are shown in Figure 4–8.

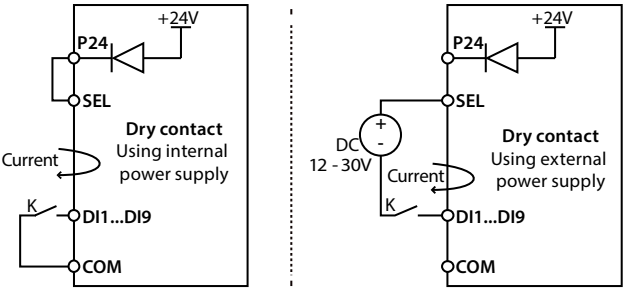

Figure 4–8 Dry contact connection

Source/Drain

Using external power supply, the source/drain connection are shown in Figure 4–9 (remove the connector between SEL and P24).

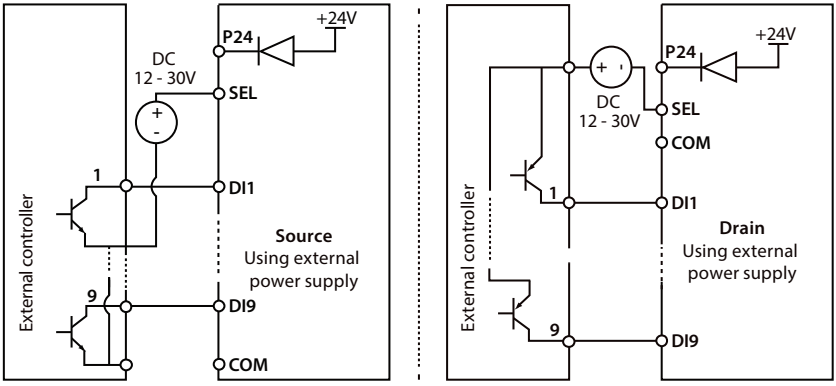

Figure 4–9 Source/drain connection when using external power

Using internal 24V power supply of HD3L, it is NPN/PNP connection in which external controller is common emitter output, as shown in Figure 4–10 (for PNP, remove the connector between SEL and P24).

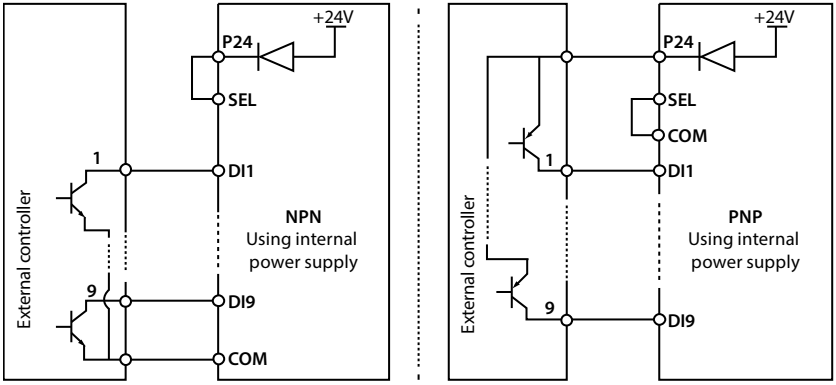

Figure 4–10 NPN (source)/PNP (drain) connection when using internal power supply

Analogue Input Connection

The AI1 is voltage input and the range is 0 - 10V, as shown in Figure 4–11.

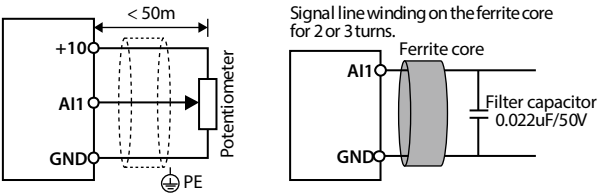

Figure 4–11 AI1 connection

Note:

1. To reduce the interference and attenuation of control signal, length of control cable should limit within 50 m, and the shield should be reliably grounded.

2. In serious interference occasions, the analogue input signal should add filter capacitor and ferrite core, as shown in Figure 4–11.

AI2/AI3 are selected as voltage input and the range is -10 - +10V. When selecting internal +10V of HD3L, refer to Figure 4–11; Selecting +/-10V external supply, refer to Figure 4–12.

AI2/AI3 are selected as current input and the range is 0 - 20mA, refer to Figure 4–12.

AI3 should correctly set jumper CN2.

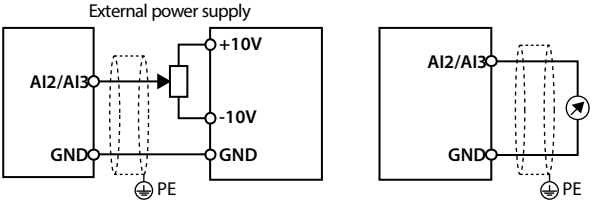

Figure 4–12 AI2/AI3 connection

When AI4 is used as setting analogue input terminal, the connection is shown as Figure 4–13 (the AI4+ = analogue signal input).

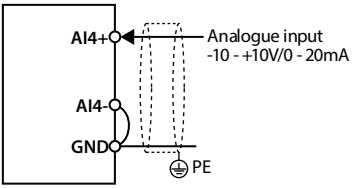

Figure 4–13 AI4 connection (AI4 = analogue input terminal)

When AI4 is used as motor overheat detection signal input terminal, the connection is shown as Figure 4–14. The motor stator coil built-in thermistor to access the analogue input and it should correctly set the jumper.

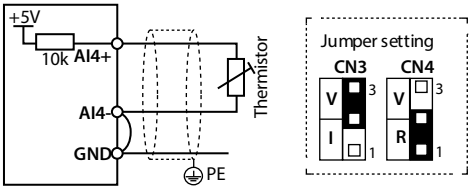

Figure 4–14 AI4 connection (AI4 = overheat detection signal input)

Digital Output Connection

DO1 can use internal 24V power supply of HD3L or external power supply, the connection is shown in Figure 4–15.

DO1 connection also applies to DO2.

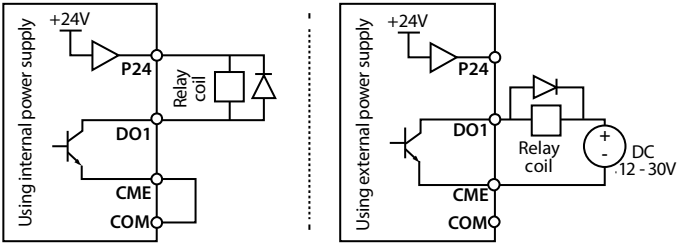

Figure 4–15 DO1 connection

4.5 Meet EMC Requirement of Installtion

4.5.1 Correct EMC Installation

According to national standards GB/T12668.3, the controller should meet the two requirements of electromagnetic interference (EMI) and anti-electromagnetic interference. The international standards IEC/61800-3 (VVVF drive system part 3: EMC specifications and test methods) are identical to the national standards GB/T12668.3.

HD3L are designed and produced according to the requirements of IEC/61800-3. Please install the controller as per the description below so as to achieve good electromagnetic compatibility (EMC).

- In a drive system, the controller, control equipment and sensors are installed in the same cabinet; The electromagnetic noise should be suppressed at the main connecting points, and the EMI filter and AC reactor should be installed in cabinet to satisfy the EMC requirements.
- The most effective but expensive measure to reduce the interference is to isolate the noise source and the noise receiver, which should be considered in mechanical system design phase. In driving system, the noise source can be controller, braking unit and contactor. Noise receiver can be automation equipment, encoder and sensor etc.

The mechanical/system are divided into different EMC areas according to electrical characteristics. Recommended installation positions are shown in Figure 4–16.

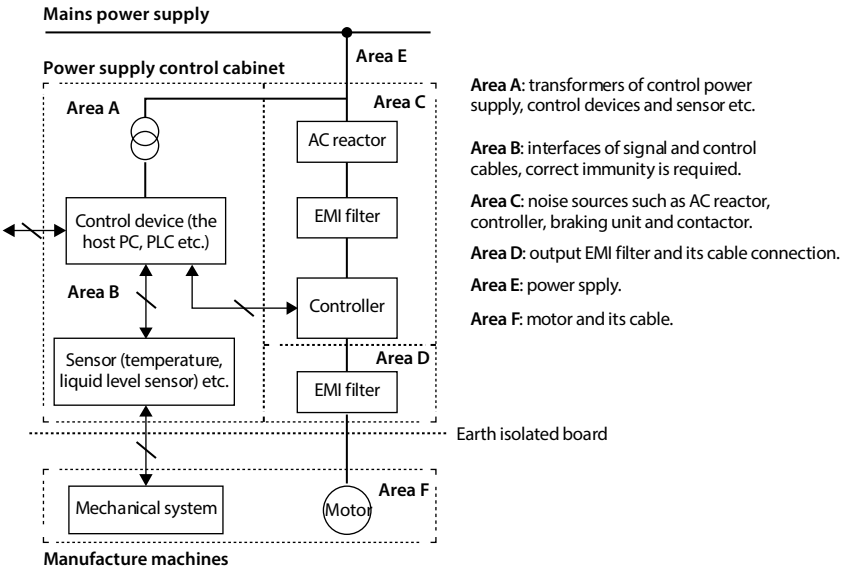

Figure 4–16 System wiring

- All areas should be isolated in space to achieve electromagnetic decoupling effect.
- The min. distance between areas should be 20cm, and use grounding bars for decoupling among areas, the cables from different area should be placed in different tubes.
- EMI filters should be installed at the interfaces between different areas if necessary.
- Bus cable (such as RS485) and signal cable must be shielded.

4.5.2 Wiring Requirement

In order to avoid interference intercoupling, it is recommended to separate the power supply cables, motor cables and the control cables, and keep enough distance among them, especially when the cables are laid in parallel and are long enough.

The signal cables should cross the power supply cables or motor cables, keep it perpendicular (90°) as shown in Figure 4–17.

Distribute the power supply cables, motor cables and control cables in different pipelines.

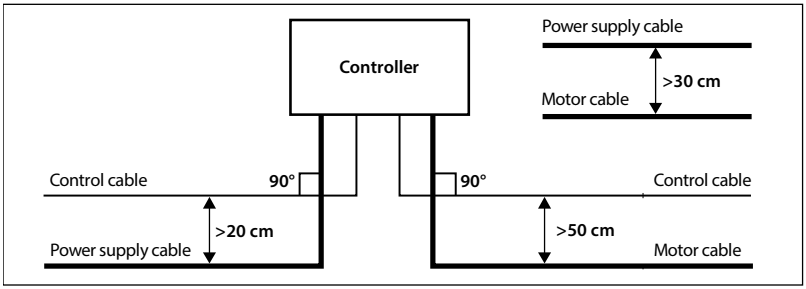

Figure 4–17 System wiring

Shielded/armoured cable: High frequency low impedance shielded cable should be used. For example: Copper net, aluminum net or iron net.

Normally, the control cables must use the shielded cables and the shielding metal net must be connected to the metal enclosure of the controller by cable clamps as shown in Figure 4–18.

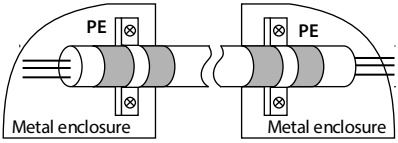

Figure 4–18 Shielded cable connection

4.5.3 Motor Connection

The longer cable between the controller and the motor is, the higher frequency leakage current will be, causing the controller output current to increase as well. This may affect peripheral devices.

When the cable length is longer than 100 meters, it is recommended to install AC output reactor and adjust the carrier frequency according to Table 4-8.

Table 4-8 Carrier frequency and the cable length between controller and motor

Cable Length	<30m	30 - 50m	50 - 100m	≥100m
Carrier Frequency	10 - 15kHz	5 - 10kHz	2 - 5kHz	<2kHz

The cross sectional area (CSA) of controller cables should refer to Table 4-2, on page 15.

The controller should be derated if the motor cables are too long or their CSA is too large. The current should be decreased by 5% when per level of CSA is increased. If the CSA increases, do the current to ground and capacitance.

4.5.4 Ground Connection

The grounding terminals PE must be connected to ground properly. The grounding cable should be as short as possible (the grounding point should be as close to the controller as possible) and the grounding area should be as large as possible. The grounding resistance should be less than 10Ω.

Do not share the grounding wire with other devices (A). HD3L can share grounding pole with other devices (C). It achieves the best effect if HD3L and other devices use dedicated grounding poles (B), as shown in Figure 4–19.

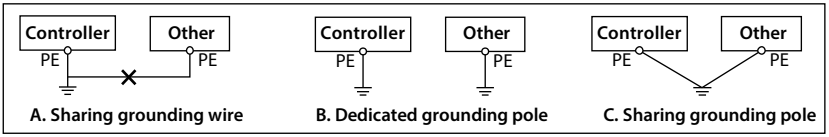

Figure 4–19 Grounding method

When using more than one controller, be careful not to loop the ground wire as shown in Figure 4–20.

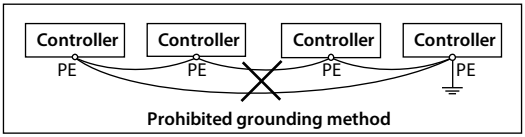

Figure 4–20 Prohibited grounding method

4.5.5 EMI Filter

The EMI filter should be used in equipment that may generate strong EMI or equipment that is sensitive to external EMI. The EMI filter is a dual-way low pass filter through which lower frequency current can flow while higher frequency current can hardly flow.

Function of EMI Filter

1. The EMI filter ensures the equipment not only satisfy the conducting emission and conducting sensitivity in EMC standard but also suppress the radiation of the equipment.

2. It can prevent the EMI generated by equipment from entering the power cable and the EMI generated by power cable from entering equipment.

Common Mistakes in Using EMI Filter

1. Too long the power cable is between the EMI filter and the controller

The filter inside the cabinet should be located near to the input power source. The length of the power cables should be as short as possible.

2. Too close the input and output cables of the EMI filter

The distance between input and output cables of the filter should be as far apart as possible. Otherwise the high-frequency noise may be coupled between the cables and bypass the filter. Thus, the filter will become ineffective.

3. Bad grounding of the EMI filter

The enclosure of EMI filter must be grounded properly to the metal case of the controller. In order to achieve better grounding effect, make use of a special grounding terminal on the enclosure. If using one cable to connect the filter to the case, the grounding is useless for high frequency interference. When the frequency is high, so is the impedance of cable, hence there is little bypass effect.

The correct installation: The filter should be mounted on the enclosure of equipment. Ensure to clear away the insulation paint between the filter case and the enclosure for good grounding contact.

4.5.6 Countermeasures for Conduction, Radiation and Radio Frequency Interference

EMI of the Controller

The operating theory of controller means that some EMI is unavoidable.

The controller is usually installed in a metal cabinet which normally little affects the instruments outside the metal cabinet. The cables are the main EMI source. If connect the cables according to this manual, the EMI can be suppressed effectively.

If the controller and other control equipment are installed in one cabinet, the area rule must be observed. Pay attention to the isolation between different areas, cable layout and shielding.

Reducing Conducted Interference

Add a noise filter to suppress conducted interference on the output side. Additionally, conducted interference can be efficiently reduced by threading all the output cables through a grounded metal tube. And conducted interference can be dramatically decreased when the distance between the output cables and the signal cables is above 0.3m.

Reducing RF Interference

The I/O cables and the controller produce radio frequency interference. A noise filter can be installed both on the input side and output side, and shield them with iron utenil to reduce RF interference.

The wiring distance between the controller and the motor should be as short as possible, as shown in Figure 4–21.

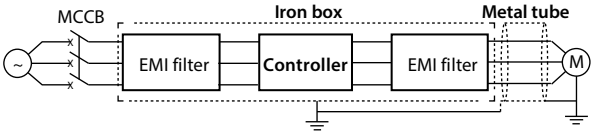

Figure 4–21 Reducing RF interference

4.5.7 Reactor

AC Input Reactor

The purpose of installing an AC input reactor: To increase the input power factor; To dramatically reduce the harmonics on the input side at the high voltage point of common coupling and prevent input current unbalance which can be caused by the phase-to-phase unbalance of the power supply.

DC Reactor

The installation of a DC reactor can increase the input power factor, improve the overall efficiency and thermal stability of controller, substantially eliminate the upper harmonics influence on performance of controller, and decrease the conducted and radiated electromagnetic emissions from the controller.

AC Output Reactor

When the length of cable between controller and motor is more than 100m, it will cause leakage current and controller tripping. It is suggested that user should consider installing an AC output reactor.

Chapter 5 Operation Instructions

Danger

- Only when the terminal cover of HD3L has been fitted can you switch on AC power source. Do not remove the cover after power is switched on.
- Ensure the motor and the mechnical device are in the use application before HD3L starts.
- Keep away from HD3L if the auto-restart function is enabled at power outage.
- To change the main control PCBA, correctly set the parameters before operating.

Warning

- Do not check or detect the signal during HD3L running.
- Do not randomly change HD3L parameter setting.
- Please thoroughly complete all control debugging and testing, make all adjustments and conduct a full safety assessment before switching the run command channel of HD3L.
- Do not touch the energy-depletion braking resistor due to the high temperature.

5.1 Function Description

Note:

In the following sections, you may encounter control, running and status of HD3L description many times. Please read this section. It will help you to correctly understand and use the functions to be discussed.

5.1.1 Operation Mode

The operation mode defines how HD3L receives run commands (start or stop command) and speed command. There are four operation modes selectable through F00.05.

Operation Mode	Description
Keypad control	The run command is controlled by **RUN** and **STOP** keys of the keypad; And the run speed is set by F00.07.
Terminal analogue control	The run command is controlled by UP and DN of the terminal; And the run speed is set by AI1 - AI4 terminals.
Terminal speed control	The run command is controlled by UP and DN of the terminal; And the run speed is set by MS1 - MS3 multi-step speed terminal combination.

5.1.2 Control Mode

HD3L has two control modes which are V/f and SVC control (refer to F00.01 for more detail).

5.1.3 Controller Status

Controller Status	Description
Stop status	After HD3L is switched on and initialized, if no run command inputs or the stop command is given, there will be no output from U/V/W of HD3L and the run status indicator on the keypad will be flashing.
Run status	HD3L will start output from U/V/W terminals after it receives the run command. And the run status indicator on the keypad will be lighting.
Motor parameters auto-tuning	Set F07.06 = 1 or 2, HD3L will receive the run command then enter motor parameters auto-tuning status. If the auto-tuning process is completed, the controller will enter stop status.
Fault alarm status	HD3L has fault.
Under-voltage status	HD3L is under-voltage.

5.1.4 Controller Running Mode

Running Mode	Description
Auto-tuning running	Set F07.06 = 1 or 2 and press **RUN** key to enter the auto-tuning running.
MS speed running	The run speed is set by MS1 - MS3 in combination or communication. This mode is accessible when F00.05 = 2 or 4.
Inspection running	When inspection signal is valid, the speed will be set by F05.08 (inspection run speed). This mode is accessible when F00.05 = 1, 2 or 4.
Battery-driven running	When emergency signal is valid, the speed will be set by F05.09 (battery driven speed). This mode is accessible when F00.05 = 1, 2 or 4.
Normal running	Controlled by keypad (F00.05 = 0) or terminal analogue (F00.05 = 1).

5.2 Operation Instructions

5.2.1 Keypad

The standard HD3L are installed with LED kaypad which is shown as Table 5-1.

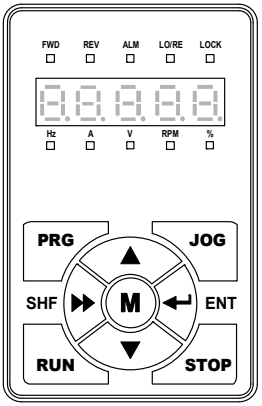

Table 5-1 Key description of keypad

Key	Description
PRG	Entry or exit programming key
JOG	In the keypad control, jog start HD3L
RUN	In the keypad control, press this key to run HD3L
STOP	a. In the keypad control, press this key to stop HD3L b. In the detection fault, press this key to reset at fault
M	Set certain function by F00.06
▲	Increase value or parameter
▼	Decrease value or parameter
▶▶	a. Select display parameter and shift bit b. Stop in loop/display the parameter during running
↵	a. Enter lower menu b. Confirm saving the data

The kaypad consists of 5 status indicators and 5 unit indicators and shown as Table 5-2.

Table 5-2 Indicator description of keypad

Mark	Name	■: Lighting	▨: Flashing	□: Lightless
FWD	Forward status	HD3L is forward running at the moment	The start of HD3L is forward running next time	
REV	Reverse status	HD3L is reverse running at the moment	The start of HD3L is reverse running next time	
ALM	Alarm status	HD3L is faulty at the moment		HD3L is well at the moment
LO/RE	Remote/local status	Indicate HD3L isn't in keypad control mode		HD3L is in keypad control mode
LOCK	Password locked status	The user password lock of HD3L is avail		There is no user password or unlocked
Hz	Frequency unit	The unit of the present parameter is Hz	The present parameter is output frequency	
A	Current unit	The unit of the present parameter is A		
V	Voltage unit	The unit of the current parameter is V		
RPM	Rotary speed unit	The unit of the present parameter is rpm	The present parameter is rotary speed unit	
%	% unit	The unit of the present function parameter is %		

5

The keypad of HD3L has five LED displays and their meanings are shown in Table 5-3.

Table 5-3 LED display description

LED Display	Meaning	LED Display	Meaning	LED Display	Meaning	LED Display	Meaning
0	0	A	A	J	J	U	U
1	1	b	b	L	L	u	u
2	2	C	C	n	n	y	y
3	3	c	c	o	o	-	-
4	4	d	d	P	P	.	Point
5	5	E	E	q	q	8.	Full display
6	6	F	F	r	r		No display
7	7	H	H	S	S	8.	Flash modifiable
8	8	h	h	T	T		
9	9	i	i	t	t		

5.2.2 Display Status

The keypad can display parameters at stop, run, edit, alarm and special status.

Parameter Display Status at Stop/Run

When HD3L is in stop/run status, the keypad will display stop/run status and its parameters, and the unit indicator displays unit, as shown in Figure 5–1.

Other parameters stop (F15.08 - F15.13)/run (F15.02 - F15.07) can be displayed by pressing ▶▶.

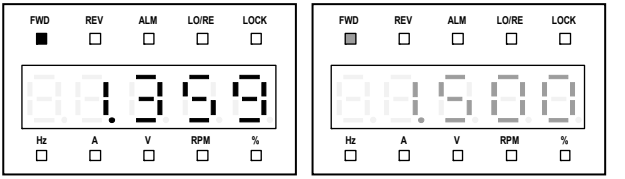

Figure 5–1 Display status of stop (left) and run (right)

Function Parameter Editing Status

At stop, run or fault alarm status, press **PRG** to enter function parameter edit status (see the description of F01.00 and the user password unlock and modify of section 5.2.3), as shown in Figure 5–2.

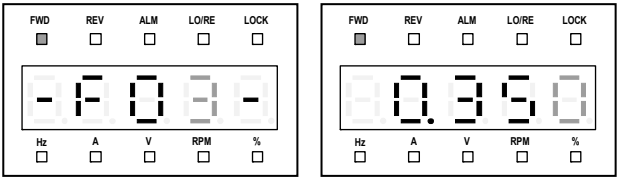

Figure 5–2 Parameter edit status

Fault Alarming Status

If HD3L detects a fault signal, the keypad will enter the fault alarm status and flash and LED will display the fault code, as shown in Figure 5–3.

The fault history can be checked by entering group F17 (F17.11 - F17.27).

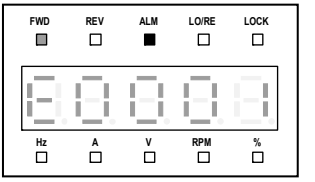

Figure 5–3 Fault alarm status

The reset at fault can be achieved by pressing **STOP** key or the external terminal.

Special Display Status

The special display status includes setting and clearing password status, parameter uploading and downloading, power on initialing, parameter auto-tuning, keypad inspection and restoring to factory setting parameter, as shown in Figure 5–4.

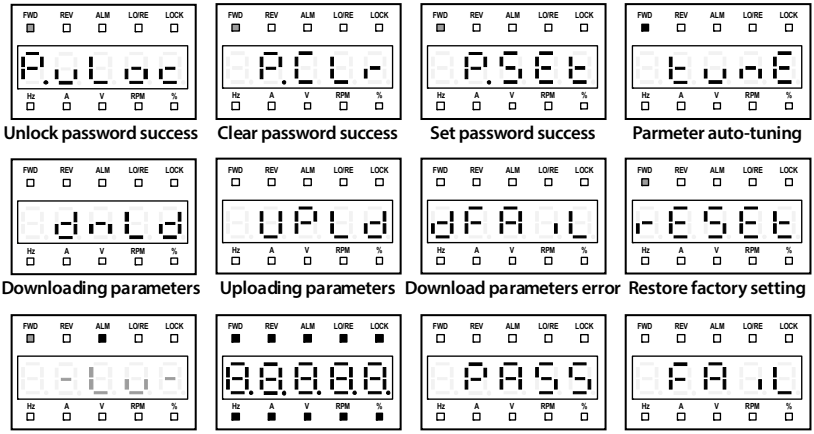

Figure 5–4 Special display status

5

5.2.3 Keypad Operation Examples

Four-level Menu Switching Operation

The keypad uses four-level menu configuration for parameter setting or other operations.

Configuring mode can be displayed in 4-level menu: **Mode setting (first-level) → function parameter group setting (second-level) → function parameter setting (third-level) → parameter setting (fourth-level)**. The operation process is shown in Figure 5–5 and the description of the keys is shown in Table 5-4.

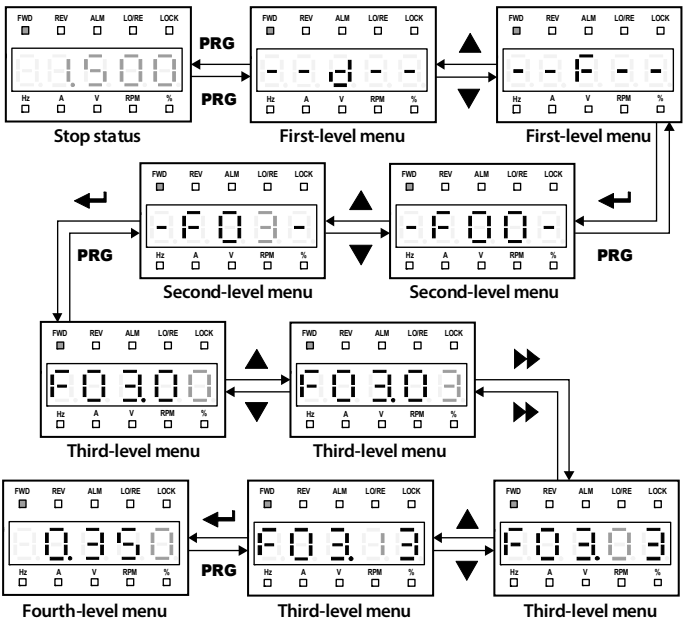

Figure 5–5 Four-level operation process

Table 5-4 Switching four-level description of the key

Key	First-level Menu	Second-level Menu	Third-level Menu	Fourth-level Menu
PRG	Fault, return to fault display; Fault cleared, return to run or stop status display	Return to first-level menu	Return to second-level menu	Do not save the present value and return to third-level
↵	Enter second-level menu	Enter third-level menu	Enter fourth-level menu	Save the present value and return to third-level
▲	Select function group. Cycle according to d-F-y	Modify No. function. Increase by 1 when press this key one time	Modify the internal No. of function group. Increase by 1 according to the present modified bit	Modify function value. Increase by 1 according to the present modified bit
▼	Select function group. Cycle according to y-F-d	Modify No. function. Decrease by 1 when press this key one time	Modify the internal No. of function group. Decrease by 1 according to the present modified bit	Modify function value. Decrease by 1 according to the present modified bit
▶▶	Invalid	Invalid	Switch unit and ten	Switch unit, ten thousand, thousand, hundred, ten

5

Parameter Setting

For example, to modify the setting value of F00.07 from 1.500m/s to 1.000m/s, refer to Figure 5–6.

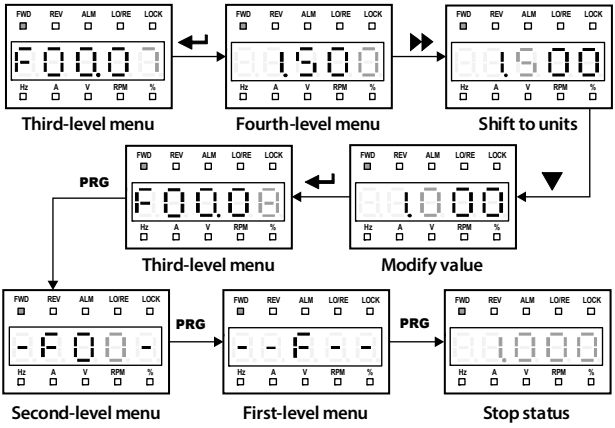

Figure 5–6 Parameter setting

When setting fourth-level menu, if the parameter is not flashing, it indicates that this parameter can't be modified. The possible reasons are as follows:

- The function parameter can't be modified, such as the actual detected parameters or recorded parameters etc.
- Only when the controller stops can the function parameter be modified.
- Only unlock password can the function parameter be edited due to the valid password.

Switching Display Parameters at Stop Status

The keypad can display six stop parameters (F15.08 - F15.13) in loop. Take the default parameter as an example, Figure 5–7 shows the switching process at stop status.

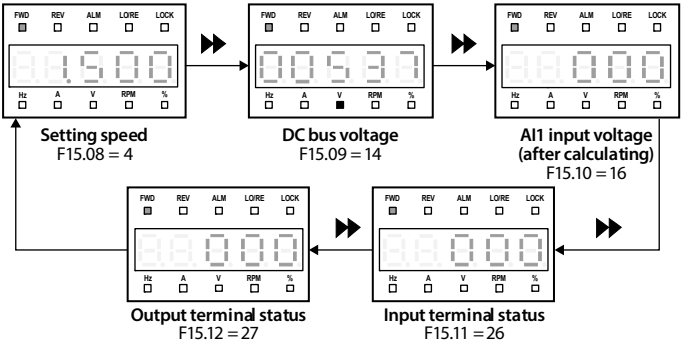

Figure 5–7 Switching display parameters at stop status

Unlock User's Password

F01.00 = non-zero, press **PRG** key to exit to stop/run display status, or detect no press on the keypad for 5 minutes, the user's password will be valid. The LOCK indicator of keypad will be lighting.

The operation of unlock user's password is as shown in Figure 5–8 which takes 4 as the user's password.

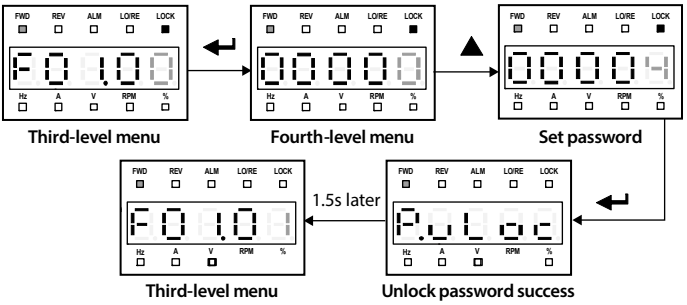

Figure 5–8 Operation of unlocking user's password

Modify User's Password

If no password, directly modify the value of F01.00 according to Figure 5–9.

If there is password, unlock the password according to Figure 5–8. When the lock successfully displays "F01.01", set a new password according to Figure 5–9 which takes "02004" as password example.

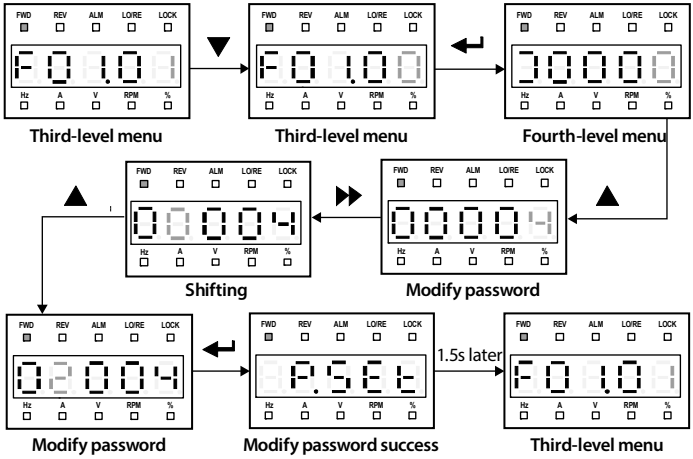

Figure 5–9 Operation of modifying user's password

Clear User's Password

If there is password, unlock according to Figure 5–8. When unlock successfully, the keypad displays "F01.01", clear the user's password according to Figure 5–10.

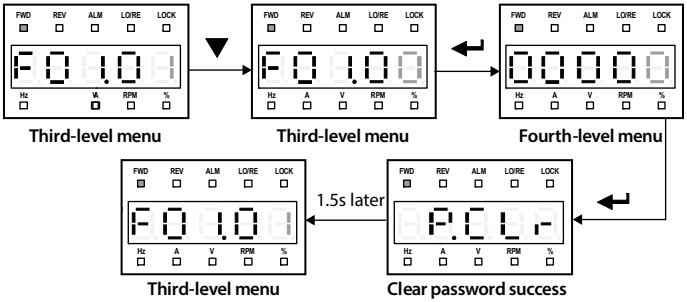

Figure 5–10 Operation of clearing user's password

Upload and Download Parameters

Upload:

When F01.03 = 1, the keypad displays "UPLd". When the upload is finished, the keypad will jump to display F01.00.

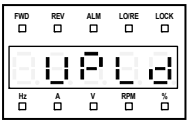

Uploading parameters

Figure 5–11 Uploading parameters

Download:

When F01.02 = 2, the keypad displays "dnLd". When the download is finished, the keypad will jump to display F01.03.

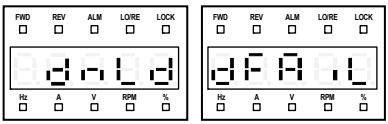

Downloading parameters Downloading error

Figure 5–12 Downloading parameters

Note:

1. When downloading parameters, it displays "dFAiL" which means that the EEPROM storage parameters of keypad does not match with function parameters of HD3L.
First, upload the setting value of the correct function code to the EEPROM of keypad, and then download.

2. When uploading/downloading parameters, it displays "E0022" and flashing which means EEPROM fault. It will jump to next function code 10 seconds later. The troubleshooting is in Chapter 8 (on page 79).

5.3 Initial Power On

It need carefully check before power is on. Please wire the controller according to the specifications supplied by this manual.

After checking the wiring and mains supply voltage, switch on the MCCB and HD3L will be initialized. The display will be as Figure 5–13.

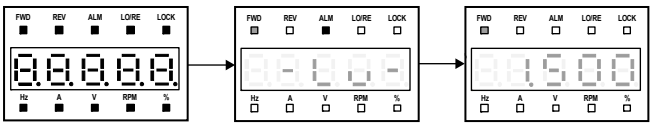

Firstly display Then display Stop status

Figure 5–13 Display initializing keypad

Chapter 6 Function Introduction

This chapter will provide user with detail function introduction of each group.

Display Parameters:

General Parameters:

6.1 Group d: Display Parameter

Group D is status display parameters.

6.1.1 d00: Status Display Parameters

Ref. Code	Function Description	Setting Range [Default]
d00.00	**Controller series**	**[Actual value]**
	Display controller series.	
d00.01	**Software version of DSP**	**[Actual value]**
	Display software version of DSP.	
d00.02	**Special software version of DSP**	**[Actual value]**
	Display special software version of DSP.	
d00.03	**Software version of the keypad**	**[Actual value]**
	Display software version of the keypad.	
d00.04	**Elevator running status**	**[Actual value]**

Display the elevator running status in 16-bit binary, as shown in the following table:

Bit15: Battery driven run 0: No 1: Yes	Bit14: MS terminal 3 0: Invalid 1: Valid	Bit13: MS terminal 2 0: Invalid 1: Valid	Bit12: MS terminal 1 0: Invalid 1: Valid
Bit11: Down forced speed switch input 0: Invalid 1: Valid	Bit10: Up forced speed switch input 0: Invalid 1: Valid	Bit9: Contactor feedback input 0: Invalid 1: Valid	Bit8: Brake feedback input 0: Invalid 1: Valid
Bit7 - Bit4: Unused, marked as “0”			
Bit3: Analogue run 0: No 1: Yes	Bit2: MS run 0: No 1: Yes	Bit1: Inspection run 0: No 1: Yes	Bit0: Controller enable 0: Disenable 1: Enable

d00.05	**Rated current of HD3L**	**[Actual value]**
	Display rated current of HD3L.	
d00.06	**Controller status**	**[Actual value]**

Display HD3L status in 16-bit binary, as shown in the following table:

Bit15: Unused	Bit14: Unused	Bit13: Stop signal 0: No stop signal 1: Stop signal	Bit12: Contactor output 0: Invalid 1: Valid
Bit11: Brake output 0: Invalid 1: Valid	Bit10: Ready to run 0: Not ready 1: Ready	Bit9: Speed within FAR 0: No 1: Yes	Bit8: Auto-tuning 0: Not in auto-tuning 1: In auto-tuning
Bit7: Zero-speed running 0: Invalid 1: Valid	Bit6: Zero-speed signal 0: Invalid 1: Valid	Bit5&Bit4: Acceleration/deceleration/constant 00: Constant 11: Unused	 01: Acceleration 10: Deceleration
Bit3: DN 0: No 1: Yes	Bit2: UP 0: No 1: Yes	Bit1: Run/stop 0: Stop 1: Run	Bit0: Controller fault 0: No fault 1: Fault

6.1.2 d01: Drive Status Parameters

Ref. Code	Function Description	Setting Range [Default]
d01.00	**Control mode**	**[Actual value]**
	Display cotrol mode.	
d01.01	**Setting speed (m/s)**	**[Actual value]**
	Display setting speed.	
d01.02	**Setting speed (after Acc/Dec) (m/s)**	**[Actual value]**
	Display speed which is calculated by Acc/Dec S curve.	
d01.03	**Feedback speed (m/s)**	**[Actual value]**
	Display actual speed of elevator.	
d01.04	**Setting frequency**	**[Actual value]**
	Display setting frequency.	
d01.05	**Setting frequency (after Acc/Dec)**	**[Actual value]**
	Display frequency (after Acc/Dec).	
d01.06	**Output frequency**	**[Actual value]**
	Display output frequency.	
d01.07	**Setting RPM**	**[Actual value]**
	Display setting RPM.	
d01.08	**Running RPM**	**[Actual value]**
	Display running RPM.	
d01.10	**Output voltage**	**[Actual value]**
	Display output voltage.	
d01.11	**Output current**	**[Actual value]**
	Display output current.	
d01.12	**Output torque**	**[Actual value]**
	Display output torque which is the relative percentage of rated torque of motor.	
d01.13	**Output power**	**[Actual value]**
	Display output power which is the relative percentage of rated power of motor.	
d01.14	**DC bus voltage**	**[Actual value]**
	Display DC bus voltage.	

6.1.3 d02: Analogue Status Display Parameters

Ref. Code	Function Description	Setting Range [Default]
d02.00	**AI1 voltage**	**[Actual value]**
	Display AI1 input voltage.	
d02.01	**AI1 voltage (after calculating)**	**[Actual value]**
	Display A1 input voltage which is calculated by the gain, bias and filter.	
d02.02	**AI2 voltage**	**[Actual value]**
	Display AI2 input voltage. When selects current input, -10.00V corresponds to 0mA, and 10.00V corresponds to 20mA.	
d02.03	**AI2 voltage (after calculating)**	**[Actual value]**
	Display AI2 input voltage which is calculated by the gain, bias and filter.	
d02.04	**AI3 voltage**	**[Actual value]**
	Display AI3 input voltage. When selects current input, -10.00V corresponds to 0mA, and 10.00V corresponds to 20mA.	
d02.05	**AI3 voltage (after calculating)**	**[Actual value]**
	Display AI3 input voltage which is calculated by the gain, bias and filter.	
d02.06	**AI4 voltage**	**[Actual value]**
	Display AI4 input voltage. When selects current input, -10.00V corresponds to 0mA, and 10.00V corresponds to 20mA.	
d02.07	**AI4 voltage (after calculating)**	**[Actual value]**
	Display AI4 input voltage which is calculated by the gain, bias and filter.	
d02.08	**AO1 output**	**[Actual value]**
	Display AO1 output. When selects current output, 0V corresponds to 0mA, and 10.00V corresponds to 20mA.	
d02.09	**AO2 output**	**[Actual value]**
	Display AO2 output. When AO2 selects current output, 0V corresponds to 0mA, and 10.00V corresponds to 20mA.	

6.1.4 d03: Running Status Parameters

Ref. Code	Function Description	Setting Range [Default]
d03.00	**Heatsink temperature**	**[Actual value]**
	Display heatsink temperature.	
d03.01	**Input terminal status**	**[Actual value]**
	Display input terminal status. Each bit (binary) of this parameter stands for different physical channels which are in the below table. • 0: Digital input terminals disconnects with common terminals. • 1: Digital input terminals connects with common terminals.	

Bit11	Bit10	Bit9	Bit8	Bit7	Bit6	Bit5	Bit4	Bit3	Bit2	Bit1	Bit0
-	-	-	DI9	DI8	DI7	DI6	DI5	DI4	DI3	DI2	DI1

Ref. Code	Function Description	Setting Range [Default]
d03.02	**Output terminal status**	**[Actual value]**
	Display output terminal status. Each bit (binary) of this parameter stands for different physical channels which are in the below table. • Positive logic: 0 stands for invalid while 1 stands for valid. • Negative logic: 0 stands for valid while 1 stands for invalid.	

Bit5	Bit4	Bit3	Bit2	Bit1	Bit0
RLY4	RLY3	RLY2	RLY1	DO2	DO1

Ref. Code	Function Description	Setting Range [Default]
d03.03	**Modbus status**	**[Actual value]**
	Display Modbus communication status. 0: Normal. 1: Communication timeout. 2: Incorrect data frame head. 3: Incorrect data frame checking. 4: Incorrect data frame content.	
d03.04	**Total time at power-on**	**[Actual value]**
d03.05	**Total running time**	**[Actual value]**
	d03.04 displays total time at power-on; d03.05 displays total running time. The unit is hour.	
d03.06	**Running times**	**[Actual value]**
	Display the running times of HD3L.	
d03.07	**Present fault**	**[Actual value]**
	Display present fault.	

6

6.2 Group F: General Parameters

6.2.1 F00: Basic Parameters

Ref. Code	Function Description	Setting Range [Default]
F00.00	**Motor type**	**0 [0]**
	0: Asynchronous motor.	
F00.01	**Motor control mode**	**0 - 6 [1]**
	0: V/f control. Constant voltage/frequency ratio control. • It is applicable for special elevator occasion. This mode does not need the encoder and the control effect is not so good as the vector control. • When select V/f control, properly set the V/f control parameter of group F07 to achieve proper efficiency. 1: SVC control. Sensorless vector control. 5: SVC5 control. 6: SVC6 control. ***Note:*** *Set motor parameter auto-tuning before selecting SVC control.* *Auto-tuning steps: Correctly set the motor parameters (F07.00 - F07.04), then start the motor parameter auto-tuning to obtain the right parameters. Meanwhile set vector control parameters of group F08 to achieve excellent vector control efficiency.*	
F00.02	**Rated speed of elevator**	**0.100 - 4.000 [1.500m/s]**
	Refers to nominal rated speed of elevator. • All of speed setting value in the parameters must <F00.02.	
F00.03	**Max. output frequency of HD3L**	**5.00 - 100.00 [50.00Hz]**
	Defines the max. frequency that HD3L is allowed to output. • Be careful to set reasonable parameters according to the nameplate of the motor and the actual operating conditions.	
F00.04	**Mechanical parameters of motor**	**10.0 - 6000.0 [60.0]**
	Defines the relationship between the elevator speed and the motor rotary speed. • The mechanical parameters are calculated based on the motor parameters. They determine the control precision and must be correctly set. The relationship of elevator speed and rotary speed of motor is: $\text{Elevator speed (m/s)} = \frac{\text{Rotary speed of motor (RPM)}}{60} \times \frac{\text{F00.04}}{1000}$ The formula for calculating F00.04 is: $\text{F00.04} = \frac{\pi \times D}{i \times \text{Winding mode}}$ D: Diameter of motor (mm); i: Dec. rate; Winding mode: The way that the hoist cable is wound, set according to the actual elevator setting.	
F00.05	**Operating mode**	**0 - 2 [0]**
	0: Keypad control. • Controlled by pressing the **RUN** or **STOP** key of the keypad. Set the run speed in F00.07. 1: Terminal analogue control. • The run command is controlled by UP and DN of the terminal, and the run speed is set by analogue input terminals. 2: Terminal MS control. • The run command is controlled by UP and DN of the terminal, and the run speed is set by MS1 - MS3 multi-step speed terminal combination.	

Ref. Code	Function Description	Setting Range [Default]
F00.06	**M-key function**	**0,1 [0]**
	0: Reserved. 1: UP/DN switch. Switch the UP/DN of motor with **M** key on the keypad.	
F00.07	**Speed setting of keypad**	**0.000 - F00.02 [1.500m/s]**
	F00.05 = 0, it sets the objective speed at running.	
F00.08	**Run direction**	**0,1 [0]**
	0: The same as run command. 1: Opposite to run command.	

6.2.2 F01: Protection of Parameters

Ref. Code	Function Description	Setting Range [Default]
F01.00	**User's password**	**00000 - 65535 [0]**
	XXXXX: To enable the password protection function, set any non-zero number as the password. • Once the password is set, and detect that there is no press on the keypad within 5 minutes, the user's password will be valid. • To change the parameters, input correct password. Otherwise can not change any parameter via keypad, but only check. 00000: The factory setting and no user's password. • If user unlocks the password, it means clearing the user's password. • To unlock, change and clear the user's password, refer to section 5.2.3.	
F01.01	**Menu mode**	**0,1 [0]**
	0: Full menu mode. All parameters can be displayed. 1: Checking menu mode. Only parameters different from factory setting can be displayed.	
F01.02	**Function code parameter initialization**	**0 - 3 [0]**
	0: No operation. HD3L is in regular parameter read/write status. • Whether can change the parameter depends on the user's password status and the actual running conditions of HD3L. 1: Restore to factory settings. • Except group F01, F07.00 - F07.14, F15.00, F17.11 - F17.27, group F18 and group Y. • **Steps:** If set F01.02 = 1, press ↵ to ensure and the parameters are restored to factory settings. The keypad dispalys "rESEt". Then the keypad will display parameters in stop status after finish restoring to factory setting. 2: Parameter download. • Except group F01, F17.11 - F17.27, group F18 and group Y. • Motor parameters, encoder parameters and magnetic pole angle etc. will be downloaded. • Record the original parameters such as motor parameters, encoder parameters and magnetic pole angle etc. or restart parameter auto-tuning. 3: Clear fault information. The fault history of F17.11 - F17.27 will be cleared.	
F01.03	**Keypad EEPROM parameter initialization**	**0,1 [0]**
	0: No operation. HD3L is in regular parameter read/write status. 1: Upload the current function code settings to the keypad EEPROM parameter. *Note: Group F01, F17.11 - F17.27, group F18 and group Y do not upload.*	

6

6.2.3 F02: Start&Stop Parameters

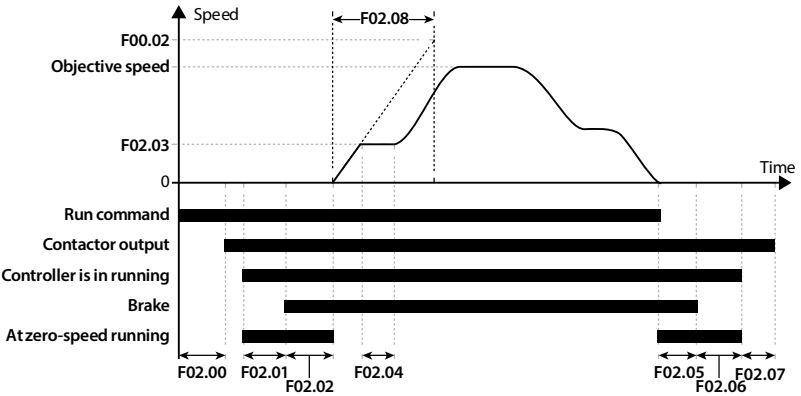

Ref. Code	Function Description	Setting Range [Default]
F02.00	**Start delay time**	**0.000 - 4.999 [0.000s]**
	When HD3L receives the run command, it will wait for the delay time set by F02.00 and then start running. • When controlled by keypad (F00.05 = 0), F02.00 is invalid.	
F02.01	**Brake open delay time**	**0.000 - 4.999 [0.000s]**
	Defines the time from zero-speed running to output brake-open command. • F02.01 enables HD3L to enter running status before the brake open, so as to alleviate the impact at start.	
F02.02	**Retention time of start zero-speed**	**0.000 - 4.999 [0.000s]**
	Defines the retention time from brake-open to output with speed. During the retention time, the motor has output torque, which makes more comfortable.	
F02.03	**Start speed**	**0.000 - 0.400 [0.000m/s]**
	Defines the initial speed required for starting HD3L. • The start speed, if properly set, can minimize the start jerk.	
F02.04	**Retention time of start speed**	**0.000 - 4.999 [0.000s]**
	Defines the time in which HD3L runs at start speed (F02.03) .	
F02.05	**Brake close delay time**	**0.000 - 4.999 [0.000s]**
	Defines the time interval from zero-speed running to output brake-closed command.	
F02.06	**Retention time of stop zero-speed**	**0.000 - 4.999 [0.000s]**
	Defines the time during which the motor runs at zero-speed and has output torque at stop, which makes more comfortable.	
F02.07	**Contactor close delay time**	**0.000 - 4.999 [0.000s]**
	Defines the running contactor delay release time after the run command is revoked.	
F02.08	**Start ramp time**	**0.000 - 2.000 [0.000s]**
	Defines the time that elevator takes to accelerate from zero to the rated speed (F00.02). • F02.08 = 0, the elevator starts from start speed directly.	

6.2.4 F03: Acc/Dec Parameters

Ref. Code	Function Description	Setting Range [Default]
F03.00	**Acc speed**	**0.020 - 9.999 [0.700m/s²]**
F03.01	**Start Acc jerk**	**0.020 - 9.999 [0.350m/s³]**
F03.02	**End Acc jerk**	**0.020 - 9.999 [0.600m/s³]**
F03.03	**Dec speed**	**0.020 - 9.999 [0.700m/s²]**
F03.04	**Start Dec jerk**	**0.020 - 9.999 [0.600m/s³]**
F03.05	**End Dec jerk**	**0.020 - 9.999 [0.350m/s³]**

	F03.00 - F03.05 adjust the elevator speed via S-curve which can cushion the shock at elevator start/stop and improve riding comfort.
	• Acc jerk: The change ratio of Acc.
	• See the right figure for the adjustment of S-curve.
	  • The S-curve becomes steeper when parameter values are raised;
	  • The S-curve becomes slower when parameter values are decreased.
	 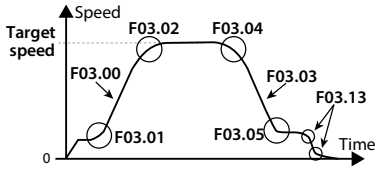	

F03.06	**Inspection Acc speed**	**0.020 - 9.999 [0.200m/s²]**
	Defines the Acc speed of elevator at inspection run mode.	
F03.07	**Inspection Dec speed**	**0.020 - 9.999 [1.000m/s²]**
	Defines the Dec speed of elevator at inspection run mode.	
F03.08	**Battery driven Acc speed**	**0.020 - 9.999 [1.000m/s²]**
	Defines the Acc speed of elevator at battery driven mode.	
F03.09	**Battery driven Dec speed**	**0.020 - 9.999 [1.000m/s²]**
	Defines the Dec speed of elevator at battery driven mode.	
F03.10	**Motor auto-tuning Acc speed**	**0.020 - 9.999 [0.100m/s²]**
	Defines the Acc speed at auto-tuning of the motor.	
F03.11	**Motor auto-tuning Dec speed**	**0.020 - 9.999 [0.100m/s²]**
	Defines the Dec speed at auto-tuning of the motor.	
F03.12	**Abnormal Dec speed**	**0.020 - 9.999 [1.000m/s²]**
	Defines the Dec speed at valid forced dec or wrong run mode.	
F03.13	**Stop Dec jerk**	**0.020 - 9.999 [0.350m/s³]**
	Defines dec change rate from non-zero speed to zero speed. • It can adjust the smooth stop of the elevator and add riding comfort.	

6.2.5 F04: Analogue Curve Parameters

Ref. Code	Function Description	Setting Range [Default]
F04.00	**Setting curve**	**0000 - 1111 [0000]**
	Unit: AI1 characteristic curve selection **Ten: AI2 characteristic curve selection** **Hundred: AI3 characteristic curve selection** **Thousand: AI4 characteristic curve selection** Each bit setting: • 0: Line 1. • 1: Line 2.	
F04.01	**Line 1 min. setting**	**0.0 - F04.03 [0.0%]**
F04.02	**Corresponding value of line 1 min. setting**	**0.0 - 100.0 [0.0%]**
F04.03	**Line 1 max. setting**	**F04.01 - 100.0 [100.0%]**
F04.04	**Corresponding value of line 1 max. setting**	**0.0 - 100.0 [100.0%]**
F04.05	**Line 2 min. setting**	**0.0 - F04.07 [0.0%]**
F04.06	**Corresponding value of line 2 min. setting**	**0.0 - 100.0 [0.0%]**
F04.07	**Line 2 max. setting**	**F04.05 - 100.0 [100.0%]**
F04.08	**Corresponding value of line 2 max. setting**	**0.0 - 100.0 [100.0%]**
	F04.01 - F04.04 define line 1. F04.05 - F04.08 define line 2. • Both line 1 and line 2 can independently achieve positive and negative characteristics as shown in following figure. 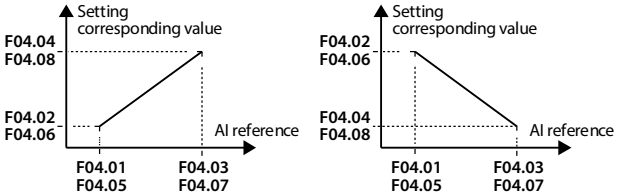	

6.2.6 F05: Speed Parameters

Ref. Code	Function Description	Setting Range [Default]
F05.00	**Multi-speed 0**	0.000 - F00.02 [0.000m/s]
F05.01	**Multi-speed 1**	0.000 - F00.02 [0.000m/s]
F05.02	**Multi-speed 2**	0.000 - F00.02 [0.000m/s]
F05.03	**Multi-speed 3**	0.000 - F00.02 [0.000m/s]
F05.04	**Multi-speed 4**	0.000 - F00.02 [0.000m/s]
F05.05	**Multi-speed 5**	0.000 - F00.02 [0.000m/s]
F05.06	**Multi-speed 6**	0.000 - F00.02 [0.000m/s]
F05.07	**Multi-speed 7**	0.000 - F00.02 [0.000m/s]
	F05.00 - F05.07 define the MS running speed which is used in MS run mode. • F00.02 defines the rated speed of elevator.	
F05.08	**Inspection run speed**	0.000 - 0.630 [0.200m/s]
	Defines the running speed of elevator in inspection mode.	
F05.09	**Battery driven run speed**	0.000 - F00.02 [0.100m/s]
	Defines the running speed of elevator in the battery driven run mode.	
F05.10	**Up forced speed switch detection value**	0.0 - 100.0 (F00.02) [97.0%]
	Defines the speed detection value at the forced switch action. • After forced switch act, the running speed exceeds speed switch detection value, and decelerates to F05.22 (creeping speed) according to F03.12 (abnormal Dec speed). • Properly set F05.10 to avoid climbing elevator at elevator up. 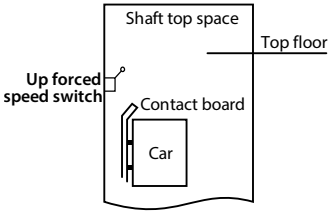	
F05.11	**Down forced speed switch detection value**	0.0 - 100.0 (F00.02) [97.0%]
	To avoid plunging elevator at elevator down. Refer to F05.10.	
F05.12	**FDT1**	0.0 - 100.0 (F00.02) [90.0%]
F05.13	**FDT2**	0.0 - 100.0 (F00.02) [90.0%]
F05.14	**FDT1 delay level**	0.0 - 100.0 (F00.02) [1.0%]
F05.15	**FDT2 delay level**	0.0 - 100.0 (F00.02) [1.0%]
	When running speed is lower than one speed (F05.12 + F05.14) as FL in the right figure, ON indicating signal will output till the running speed is lower than F05.12. FL = F05.12 + F05.14. • Refer to parameter F05.12 and F05.14 about F05.13 and F05.15. 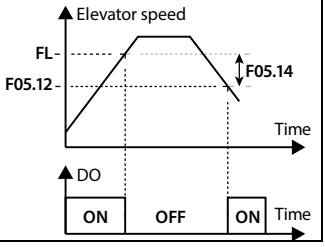	

6

Ref. Code	Function Description	Setting Range [Default]
F05.16	**Speed within FAR range**	**0.0 - 20.0 [1.0%]**
	The pulse signal will output if elevator speed is within the FAR range. As shown in the right figure. 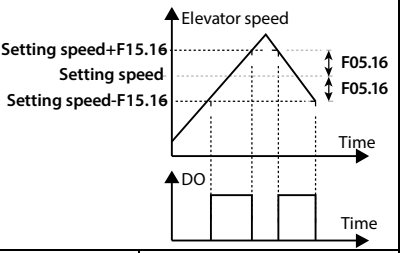	
F05.17	**Over-speed setting**	**80.0 - 120.0 (F00.02) [115.0%]**
F05.18	**Over-speed detection time**	**0.0 - 2.0 [0.2s]**
	When the actual elevator speed exceeds F05.17 and the duration time exceeds F05.18, HD3L alarms E0032 fault (motor over speed). • F05.18 = 0, HD3L does not detect motor over speed fault.	
F05.19	**Detection value of speed deviation**	**0.0 - 30.0 (F00.02) [20.0%]**
F05.20	**Detection time of speed deviation**	**0.0 - 2.0 [1.0s]**
	When the deviation of setting speed (after Acc/Dec) and actual run speed of motor exceeds F05.19 and the duration time exceeds F05.20, HD3L alarms E0018 fault (excessive speed deviation). • F05.19 or F05.20 = 0, HD3L does not detect the excessive speed deviation fault of motor.	
F05.22	**Creeping speed**	**0.000 - 0.400 [0.050m/s]**
	Defines the running speed at the forced Dec run.	

6.2.7 F06: Weighing Compensation Parameters

Ref. Code	Function Description	Setting Range [Default]
F06.00	**Pre-torque selection**	**0 - 3 [0]**
	The pre-torque function can output the load balancing torque in advance to avoid reverse and reduce the start impact. 0: No pre-torque function. 1: Analogue setting. Output balancing torque according to the input analogue weight signal. 2: DI setting. Output balancing torque according to the input digital weight signal. 3: Digital pre-torque. Select 3 if no weighing device is at the elevator. • Then adjust the pre-torque digital setting parameter to make the elevator fully excitation before open brake, therefore improve the starting comfort. • Compensation value = pre-torque bias - pre-torque digital setting. 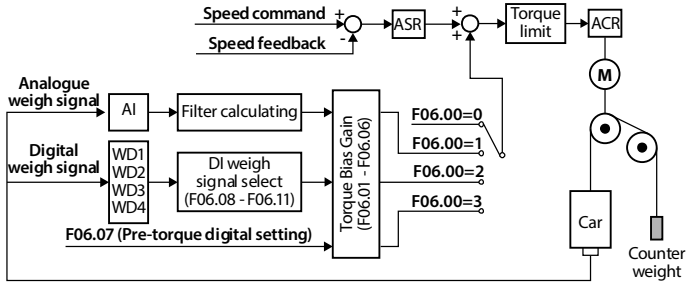 	
F06.01	**Up pre-torque bias**	**0.0 - 100.0 [50.0%]**
F06.02	**Down pre-torque bias**	**0.0 - 100.0 [50.0%]**
	Pre-torque bias = (elevator counter weight - car weight) / rated load.	
F06.03	**Up electrical pre-torque gain**	**0.000 - 9.000 [1.000]**
F06.04	**Up brake pre-torque gain**	**0.000 - 9.000 [1.000]**
F06.05	**Down electrical pre-torque gain**	**0.000 - 9.000 [1.000]**
F06.06	**Down brake pre-torque gain**	**0.000 - 9.000 [1.000]**
F06.07	**Pre-torque digital setting**	**-100.0 - +100.0 [10.0%]**
	At no weighing device, set the pre-torque value by changing F06.07.	
F06.08	**DI weighing signal 1**	**0.0 - 100.0 [10.0%]**
F06.09	**DI weighing signal 2**	**0.0 - 100.0 [30.0%]**
F06.10	**DI weighing signal 3**	**0.0 - 100.0 [70.0%]**
F06.11	**DI weighing signal 4**	**0.0 - 100.0 [90.0%]**
	When digital weighing signal termianl input is enabled, its value is the percentage of rated load. **For example:** • If DI weighing signal 1 is enabled, it expresses that the present load is F06.08% of the rated load. • If numbers of terminals are enabled simultaneously, the max. number terminal will be considered as the valid one.	
F06.19	**Operation time when brake closed early**	**0.000 - 1.999 [0.000s]**

6

6.2.8 F07: Asyn. Motor Parameters

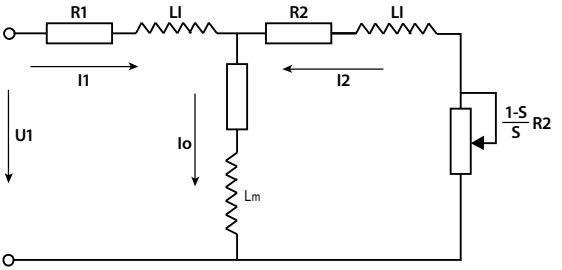

R1=F07.07 (Stator resistance) Ll=F07.09 (Leakage inductance)
R2=F07.08 (Rotor resistance) Lm=F07.10 (Mutual inductance)
Io=F07.11 (Excitation current) S=Slip ratio

The relationship between rated torque current, idling excitation current and rated current of motor is:

Rated torque current = F07.05 × F07.02

Idling excitation current F07.11 = $\sqrt{1 - F07.05^2} \times F07.02$

Mutual inductance F07.10 = $\dfrac{F07.01}{2\sqrt{3}\pi \times F07.03 \times F07.11} - F07.09$

Ref. Code	Function Description	Setting Range [Default]
F07.00	**Rated power of motor**	**0.2 - 400.0kW [Depend on HD3L]**
F07.01	**Rated voltage of motor**	**0V - HD3L rated voltage [Depend on HD3L]**
F07.02	**Rated current of motor**	**0.0 - 999.9A [Depend on HD3L]**
F07.03	**Rated frequency of motor**	**1.00 - 100.00 [50.00Hz]**
F07.04	**Rated RPM of motor**	**1 - 24000 [1440rpm]**
F07.05	**Power factor of motor**	**0.001 - 1.000 [Depend on HD3L]**
F07.06	**Motor parameter auto-tuning**	**0 - 2 [0]**

	0: Auto-tuning is disabled.
	1: Stationary auto-tuning.
	2: Rotary auto-tuning.
	Motor auto-tuning:
	• In the process of stationary auto-tuning, the stator resistance (F07.07), rotor resistance (F07.08) and leakage inductance (F07.09) will be auto-measured and written into F07.07, F07.08 and F07.09 automatically.
	• For mutual inductance (F07.10) and idling excitation current (F07.11).
	  • At stationary auto-tuning (F07.06 = 1), it will auto calculate according to F07.05 and F07.02, then write the result into F07.10 and F07.11;
	  • At rotary auto-tuning (F07.06 = 2), the motor will be at rotary status and the auto-measured value will be written into F07.10 and F07.11.
	• When the motor is in rotary status, oscillation and even overcurrent might occur. In this case, press the **STOP** key to stop auto-tuning and then properly adjust the F07.21 (oscollation-suppression mode) and F07.22 (oscollation-suppression coefficient) to mitigate the possible oscillation.
	Note: The auto-tuning is enabled only in keypad control mode (F00.05 = 0).	

Ref. Code	Function Description	Setting Range [Default]
	Auto-tuning steps: • 1. Input correct motor parameters as per its nameplate (F07.00 - F07.04). • 2. F07.06 = 2, set proper Acc speed (F03.10) and Dec speed (F03.11) and make sure the motor is disconnected with the load for security. • 3. Set F07.06 = 1 or 2, then press the ↵ key, and there with press **RUN** key to start auto-tuning. The keypad will display "tunE". • 4. When the auto-tuning is completed, the keypad displays the parameters of stop status and F07.06 resets to 0.	
F07.07	**Stator resistance of motor**	**0.000 - 65.535Ω [Depend on HD3L]**
F07.08	**Rotor resistance of motor**	**0.000 - 65.535Ω [Depend on HD3L]**
F07.09	**Leakage inductance of motor**	**0.0 - 6553.5mH [Depend on HD3L]**
F07.10	**Mutual inductance of motor**	**0.0 - 6553.5mH [Depend on HD3L]**
F07.11	**Idling excitation current of motor**	**0.0 - 999.9A [Depend on HD3L]**
F07.12	**Core saturation coefficient 1 of motor**	**0.00 - 0.50 [0.50]**
F07.13	**Core saturation coefficient 2 of motor**	**0.00 - 0.75 [0.75]**
F07.14	**Core saturation coefficient 3 of motor**	**0.00 - 1.20 [1.20]**
F07.15	**Motor torque boost**	**0.1 - 30.0 [0.1%]**
F07.16	**Torque boost end-point of motor**	**0.1 - 50.0 (F07.03) [2.0%]**
	To compensate the torque drop at low frequency, boost the voltage so as to boost the torque. F07.16 is relative to percentage of rated frequency of motor (F07.03).	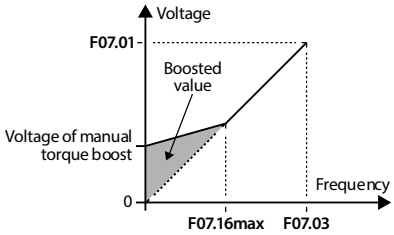

6

Ref. Code	Function Description	Setting Range [Default]
F07.17	**Slip compensation gain of motor**	**0.0 - 300.0 [100.0%]**
F07.18	**Slip compensation filter time of motor**	**0.1 - 10.0 [0.1s]**
F07.19	**Slip compensation limitation of motor**	**0.0 - 250.0 [200.0%]**

	The slip of motor changes with the load torque, which results in the variance of motor speed.
	Slip compensation (HD3L will auto adjust its output frequency according to the motor load torque) can reduce the influence.
	• In driving status (actual speed < setting speed) and in generating status (actual speed > setting speed), the slip compensation gain (F07.17) can be increased gradually.
	  • The value of auto slip compensation depends on rated slip of motor, so make sure the rated frequency (F07.03) and rated RPM (F07.04) are set correctly.
	• Range of slip compensation = F07.19 × rated slip.
	• Rated slip = F07.03 - F07.04 × Np / 60.
	  • Np is the number of motor pole pairs.
	 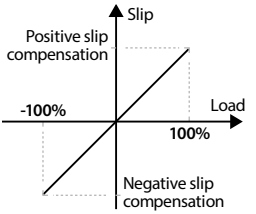	

F07.20	**AVR function**	**0 - 2 [1]**
	0: Disabled. 1: Enabled all the time. 2: Disabled in Dec process. • The output voltage can be regulated to maintain constant via AVR. Thus, normally the AVR function should be enabled, especially when the input voltage is higher than the rated voltage. • In Dec process, if F07.20 = 0 or 2, the running current will be a little higher; While if F07.20 = 1, the motor will decelerate steadily and the current will be smaller.	
F07.21	**Oscillation-suppression mode of motor**	**0,1 [0]**
	0: Depend on exciting component. 1: Depend on torque component.	
F07.22	**Oscillation-suppression coefficient of motor**	**0 - 200 [100]**
	This function is used to damp oscillation when output current is continually unstable. • This function helps to keep the motor running smoothly through correctly adjusting the setting of F07.22.	

6.2.9 F08: Motor Vector Control Speed-loop Parameters

Ref. Code	Function Description	Setting Range [Default]
F08.00	**Low speed ASR KP**	**1 - 9999 [500]**
F08.01	**Low speed ASR KI**	**0 - 9999 [500]**
F08.02	**High speed ASR KP**	**1 - 9999 [500]**
F08.03	**High speed ASR KI**	**0 - 9999 [500]**
F08.04	**ASR PI swithcing frequency 1**	**0.00 - 50.00 [10.00Hz]**
F08.05	**ASR PI swithcing frequency 2**	**0.00 - 50.00 [15.00Hz]**
	F08.00 - F08.05 and F08.07 confirm the PID parameters of ASR. The structure of ASR is shown in figure: 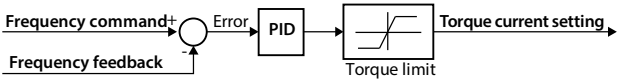 As the right figure: 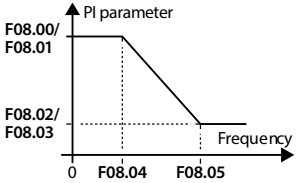 • When HD3L operates within 0 - F08.04, the PI parameters of vector control are F08.00 and F08.01; • When HD3L operates above F08.05, the PI parameters of vector control are F08.02 and F08.03; • When HD3L operates within F08.04 - F08.05, P is the linear interpolation between F08.00 and F08.02, while I is the linear interpolation between F08.01 and F08.03. • The system response can be expedited through increasing the ASR KP (F08.00, F08.02), but oscillation may occur if the value of KP is too high. • The system response can be expedited through increasing the ASR KI (F08.01, F08.03), but oscillation and high overshoot happen easily if the value of KI is too high. • If F08.01/F08.03 = 0 and the integral function is unused, the speed-loop works only as a proportional regulator. • Generally, adjust the KP firstly to the max. on condition that the system does not vibrate, and then adjust the KI to shorten the response time without overshoot. • To shorten dynamic response time during lowe frequency running, increase KP and KI.	
F08.06	**ASR integral limitation**	**0.0 - 200.0 (F07.02) [180.0%]**
	It is used to limit the max. value of the vector control speed-loop integral.	
F08.07	**ASR differential time**	**0.000 - 1.000 [0.000s]**
	Defines the vector control speed-loop differential time. • Generally, it doesn't need to set F08.07 except for expediting the dynamic response. • F08.07 = 0, there is no speed-loop differential.	
F08.08	**ASR output filter time**	**0.000 - 1.000 [0.008s]**
	It is used to filter the output of ASR regulator. • F08.08 = 0, the speed-loop filter is unused.	

6

Ref. Code	Function Description	Setting Range [Default]
F08.09	**UP electrical torque limit**	**0.0 - 200.0 (F07.02) [180.0%]**
F08.10	**DN electrical torque limit**	
F08.11	**UP regenerative torque limit**	
F08.12	**DN regenerative torque limit**	
	F08.09 - F08.12 are the relative percentage of motor rated current (F07.02). As the right figure: • The bigger torque output, the bigger current output. • If the torque is too big, over-current is easy to occur. • If the torque is too small, the run speed and the Acc/Dec speed may deviate from the setting value. 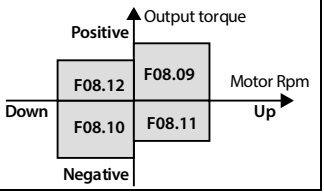	

6.2.10 F12: Digital I/O Terminal Parameters

Ref. Code	Function Description	Setting Range [Default]
F12.00	**Input terminal filter time**	**0.000 - 1.000 [0.010s]**
	Defines filter time of digital input termianl and to set input terminal sensibility. • The input terminals are susceptible to interference which will result in misoperation, so F12.00 can be increased. But too long filter time will affect sensibility.	
F12.01	**DI1 function**	**000 - 134 [1]**
F12.02	**DI2 function**	**000 - 134 [2]**
F12.03	**DI3 function**	**000 - 134 [3]**
F12.04	**DI4 function**	**000 - 134 [4]**
F12.05	**DI5 function**	**000 - 134 [5]**
F12.06	**DI6 function**	**000 - 134 [6]**
F12.07	**DI7 (I/O board) function**	**000 - 134 [0]**
F12.08	**DI8 (I/O board) function**	**000 - 134 [0]**
F12.09	**DI9 (I/O board) function**	**000 - 134 [0]**

Note: Hundred digit = 0, normally open input selected; = 1, normally closed input selected.

0: Unused. Terminal function is unused. HD3L ignores the signal input via this terminal.

- The unused terminal is recommended to be set as 0 so as to avoid wrong connection or action.

1: Controller enabled (EN).

- When enabled, HD3L is enabled to run.
- When unused, HD3L is unused to run and will be in coasts to stop status.
- When no terminal selects this function, it defaults that HD3L is at enabled status.

2,3: UP/DN.

- Set control terminal to control up and down of elevator. The terminals are in below table.

UP Terminal	DN Terminal	Selection
0	0	Stop
0	1	Down
1	0	Up
1	1	Stop

Ref. Code	Function Description	Setting Range [Default]
	4 - 6: Multi-speed 1 - 3 (MS1 - MS3). • Achieve 8-speed running curve via terminals logic combination, as follow table.	

MS3 Terminal	MS2 Terminal	MS1 Terminal	Multi-speed Setting
0	0	0	Multi-speed 0 (F05.00)
0	0	1	Multi-speed 1 (F05.01)
0	1	0	Multi-speed 2 (F05.02)
0	1	1	Multi-speed 3 (F05.03)
1	0	0	Multi-speed 4 (F05.04)
1	0	1	Multi-speed 5 (F05.05)
1	1	0	Multi-speed 6 (F05.06)
1	1	1	Multi-speed 7 (F05.07)

7: Inspection input (INS).
- If enabled, elevator will do inspection running.
- This signal, when used together with UP/DN (No.2 or No.3 function) command, can control the elevator to go up or down during inspection.

8: Battery-driven input (BAT).
- If enabled, elevator will enter battery-driven running status.

9: Contactor feedback input (CSM).

10: Brake feedback input (BSM).

11 - 14: Weighing signal input 1 - 4 (WD1 - WD4).
- The switch weight signals can input through this terminal. Based on these signals, HD3L sets the torque bias and starts the elevator stably.
- Select among WD1 - WD4 according to the actual number of weighing devices and set the load of switches based on F06.08 - F06.11 (DI weighing signal 1 - 4).
- If many terminals are enabled, the max. No. terminal will be enabled.
  For example: When WD1 and WD2 are enabled simultaneously, only WD2 is the valid one.

15: Motor overheat input (OH).

16: Fault reset input (RST).
- When HD3L alarms fault, reset it by this terminal.
- The function of RST terminal is the same as the **STOP** key.

17: Up forced speed input (UPF).

18: Down forced speed input (DNF).

19: Governor feedback input (OSG).

34: External fault (EXT).
- The fault signal of external equipment can input through this terminal, so HD3L can monitor that equipment and respond accordingly. HD3L alarms E0024 fault (external fault) when receives the EXT signal.

F12.13	**Filter time of multi-speed terminal**	**0.000 - 2.000 [0.010s]**
	Defines the MS filter time to make up for the time error of MS input terminals. • Change F12.13 according to the change asynchronous level of numbers of MS input terminals.	
F12.15	**DO1 function**	**0 - 19 [2]**
F12.16	**DO2 function**	**0 - 19 [3]**
F12.17	**RLY1 function**	**0 - 19 [14]**
F12.18	**RLY2 (I/O board) function**	**0 - 19 [0]**

6

Ref. Code	Function Description	Setting Range [Default]
F12.19	**RLY3 (I/O board) function**	**0 - 19 [0]**
F12.20	**RLY4 (I/O board) function**	**0 - 15 [0]**

0: Unused.

1: Controller is ready.

- Signal ON will output if HD3L has no fault.

2: Controller is running.

- HD3L is in run status and outputs indicating signal.

3: Zero-speed running.

- ON signal will output if output speed of HD3L is zero but HD3L is in run status.

4: Zero-speed.

- ON signal will output if output speed of HD3L is zero.

5: Contactor output control.

- To open/close the output contactor.

6: Brake output control.

- To open/close the brake.

7,8: FDT1, FDT2.

- Refer to F05.12 - F05.13.

9: Speed within FAR signal.

- The indication signal will output when output speed of HD3L is within the FAR range. The detect range is set by F05.16 (speed within FAR range).
- The indication signal will also output at stop.

10: Up signal output.

- ON signal will output when the elevator is at up running.

11: Down signal output.

- ON signal will output when the elevator is at down running.

12: Under-voltage.

- ON signal will output when HD3L is in under-voltage status.

14: Controller fault.

- ON signal will output when HD3L has fault.

15: Elevator stop signal.

- When the elevator stops, HD3L will stop and outputs a 2s pulse signal, according to which HD3L revokes run command.

F12.21	**Output terminal logic setting**	**00 - 0x3F [0]**

Defines that each bit (binary) represents different output terminal.

- 0: Positive logic. When output terminals are connected to corresponding common port, this logic is enabled. Otherwise the logic is disabled.
- 1: Negative logic. When output terminals are connected to corresponding common port, this logic is disabled. Otherwise the logic is enabled.

Ten				Unit			
Bit7	Bit6	Bit5	Bit4	Bit3	Bit2	Bit1	Bit0
-	-	RLY4	RLY3	RLY2	RLY1	DO2	DO1

6.2.11 F13: Analogue I/O Terminal Parameters

Ref. Code	Function Description	Setting Range [Default]
F13.00	AI1 function	0 - 2 [0]
F13.01	AI2 function	0 - 2 [0]
F13.02	AI3 function	0 - 2 [0]
F13.03	AI4 function	0 - 3 [0]
	0: Unused. 1: Speed setting. 2: Weighing signal. 3: Motor overheat signal input (only AI4 enabled). • Connect the electronic thermistor embedded motor stator coils to AI4, refer to Figure 4–14, on page 25. • Refer to parameters F17.01 and F17.02 about the thermistor. • AI1 input range: 0 - 10V. AI2 - AI4 input range: -10 - +10V.	
F13.04	AI1 bias	-100.0 - +100.0 [0.0%]
F13.07	AI2 bias	
F13.10	AI3 bias	
F13.13	AI4 bias	
F13.05	AI1 gain	-10.00 - +10.00 [1.00]
F13.08	AI2 gain	
F13.11	AI3 gain	
F13.14	AI4 gain	
F13.06	AI1 filter time	0.01 - 10.00 [0.05s]
F13.09	AI2 filter time	
F13.12	AI3 filter time	
F13.15	AI4 filter time	
	When AI1 - AI4 sets frequency, the relationship between the analogue input and the analogue value after calculating is shown as figure: Analogue actual value → Analogue input filtering → Analogue input gain Analogue input bias → Analogue value after calculating • The formula is: Analogue value after calculating = gain × analogue actual value + bias. • F13.06, F13.09, F13.12 and F13.15 define the filter time. • The longer filter time is, the higher immunity level is, the response time is prolonged. The shorter filter time is, the quicker response time is, the lower the immunity level is.	

6

Ref. Code	Function Description	Setting Range [Default]
F13.16	**AO1 function**	**0 - 9 [0]**
F13.17	**AO2 function**	**0 - 9 [0]**
	0: Unused. 1: Running speed (0 - max. output speed). 2: Setting speed (0 - max. output speed). 3: Output current (0 - twice rated current of HD3L). 4: Output voltage (0 - 1.2 times rated voltage of HD3L). 5: Bus voltage (0 - 2.2 times rated voltage of HD3L). 6: AI1 input (0 - 10V). 7: AI2 input (-10 - +10V/0 - 20mA). 8: AI3 input (-10 - +10V/0 - 20mA). 9: AI4 input (-10 - +10V/0 - 20mA). *Note:* *1. At up, up limit of No.1 and No.2 function is corresponding to 10V, while down limit is corresponding to 5V;* *2. At down, up limit of No.1 and No.2 function is corresponding to 0V, while down limit is corresponding to 5V;* *3. Up limit of No. 3 - 5 functions is corresponding to max. output voltage 10V;* *4. When the negative voltage of No.7 - 9 function inputs, the AO will output its absolute value.*	
F13.18	**AO1 bias**	**-100.0 - +100.0 [0.0%]**
F13.19	**AO1 gain**	**0.0 - 200.0 [100.0%]**
	The proportional relation of output can be adjusted by output gain, as shown in the figure below. • The formula is: AO1 actual output = F13.19 × value before calculating + F13.18. 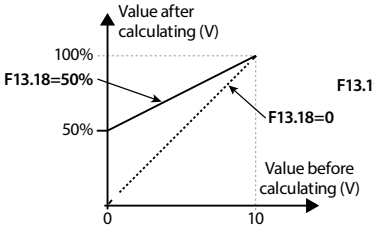 **Analogue output and bias** 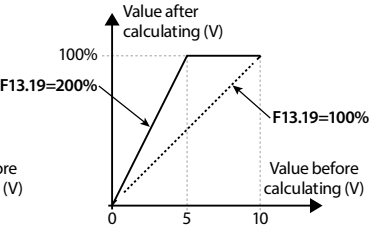 **Analogue output and gain**	
F13.20	**AO2 bias**	**-100.0 - +100.0 [0.0%]**
F13.21	**AO2 gain**	**0.0 - 200.0 [100.0%]**
	Refer to F13.18 and F13.19.	

6.2.12 F14: SCI Communication Parameters

Ref. Code	Function Description	Setting Range [Default]
F14.00	**Data format**	**0 - 5 [0]**
	0: 1-8-2 format, no parity, RTU. 1: 1-8-1 format, even parity, RTU. 2: 1-8-1 format, odd parity, RTU. 3: 1-7-2 format, no parity, ASCII. 4: 1-7-1 format, even parity, ASCII. 5: 1-7-1 format, odd parity, ASCII.	
F14.01	**Baud rate**	**0 - 5 [3]**
	0: 1200bps. 1: 2400bps. 2: 4800bps. 3: 9600bps. 4: 19200bps. 5: 38400bps.	
F14.02	**Local address**	**0 - 247 [2]**
	F14.02 = 0, it means broadcast address.	
F14.03	**Host PC response time**	**0 - 1000 [0ms]**
F14.04	**Detection time of communication timeout**	**0.0 - 1000.0 [0.0s]**
	Time at no communication data > setting time of F14.04, it will be considered as E0028 fault (SCI communication timeout). • F14.04 = 0, it will not detect communication timeout.	
F14.05	**Detection time of communication error**	**0.0 - 1000.0 [0.0s]**
	Time at communication error > setting time of F14.05, it will be considered as E0029 fault (SCI communication error). • F14.05 = 0, it will not detect the communication error.	

6.2.13 F15: Display Control Parameters

Ref. Code	Function Description	Setting Range [Default]
F15.00	**Language selection**	**0,1 [0]**
	Defines the displaying language on the LCD keypad. 0: Chinese. 1: English.	
F15.01	**Display contrast of the LCD keypad**	**1 - 10 [5]**
	To select LCD display contrast.	
F15.02	**Set parameter 1 of run status**	**0 - 32 [5]**
F15.03	**Set parameter 2 of run status**	**0 - 32 [6]**
F15.04	**Set parameter 3 of run status**	**0 - 32 [10]**
F15.05	**Set parameter 4 of run status**	**0 - 32 [11]**
F15.06	**Set parameter 5 of run status**	**0 - 32 [0]**
F15.07	**Set parameter 6 of run status**	**0 - 32 [0]**
F15.08	**Set parameter 1 of stop status**	**0 - 32 [4]**
F15.09	**Set parameter 2 of stop status**	**0 - 32 [14]**
F15.10	**Set parameter 3 of stop status**	**0 - 32 [16]**
F15.11	**Set parameter 4 of stop status**	**0 - 32 [26]**

Ref. Code	Function Description	Setting Range [Default]
F15.12	**Set parameter 5 of stop status**	**0 - 32 [27]**
F15.13	**Set parameter 6 of stop status**	**1 - 30 [0]**
	The keypad displays parameters which is the run status (F15.02 - F15.07) and stop status (F15.08 - F15.13). • It can be cycling displayed by ▶▶ key on the keypad. • Each content of display parameter can be set corresponding to 32 statuses. • For instance: When set F15.08 = 7, the stop parameter is setting RPM at initial power on. 1: Rated current of HD3L. 2: Controller status. Refer to d00.06. 3: Operate channel. 4: Setting speed. 5: Setting speed (after Acc/Dec). 6: Output frequency. 7: Setting RPM. 8: Running RPM. 10: Output voltage. 11: Output current. 12: Output torque. 13: Output power. 14: DC bus voltage. 15: AI1 voltage. 16: AI1 voltage (after calculating). 17: AI2 voltage. 18: AI2 voltage (after calculating). 19: AI3 voltage. 20: AI3 voltage (after calculating). 21: AI4 voltage. 22: AI4 voltage (after calculating). 23: AO1 output. 24: AO2 output. 25: Heatsink temperature. 26: Input terminal status. • Bit0 - Bit11 correspond to DI1 - DI12. 27: Output terminal status. • Bit0 - Bit5 correspond to DO1, DO2 and RLY1 - RLY4. 28: Modbus status. 29: Total time at power on (hour). 30: Total running time (hour).	

6.2.14 F16: Function-boost Parameters

Ref. Code	Function Description	Setting Range [Default]
F16.00	**Zero-speed running signal delay time**	**0.00 - 10.00 [0.30s]**
	Defines the delay time of HD3L from zero-speed run status to zero-speed run signal output.	
F16.01	**Zero-speed signal delay time**	**0.00 - 10.00 [0.30s]**
	Defines the delay time of HD3L from zero-speed status to zero-speed signal output.	
F16.02	**Current keep time after stop**	**0 - 9999 [0ms]**
	To eliminate the current noise of motor at stop, when the brake finished, the cut-off run signal will reduce the current to zero after the time of F16.02.	
F16.03	**Fan control**	**0 - 2 [0]**
	Defines the fan control mode. If there is overheat protection, the fan will run all the time. 0: Auto stop. • The fan runs all the time when HD3L is in run status. After HD3L stops for the time of F16.04, the fan continues running if overheat protection is activated. 1: Immediately stop. • The fan runs all the time when HD3L is in running status, but stops when HD3L stops. 2: Run when power on. • The fan runs continuously after HD3L is switched on.	

Ref. Code	Function Description	Setting Range [Default]
F16.04	**Fan control delay time**	**0.0 - 600.0 [30.0s]**
F16.05	**Brake unit action voltage**	**380 - 750V [Depend on HD3L]**
	For 380V voltage class controller, the braking voltage range is 630 - 750V. For 220V voltage class controller, the braking voltage range is 380 - 450V. *Note: The braking action enables only in run status of HD3L.*	
F16.06	**Detection time of contactor fault**	**0.1 - 10.0 [2.0s]**
F16.07	**Multi-speed inspection**	**0 - 7 [0]**
	When the DI terminals are not enough, the MS1 - MS3 can achieve inspection run. • DI terminal = INS (No. 7 function), only need set F16.07 as 0 to enter terminal inspection run. • DI terminal ≠ INS (No. 7 function), the inspection run can be achieved via the MS1 - MS3. • Value of MS1 - MS3 = value of F16.07, enter MS inspection run at MS run speed (F05.00 - F05.07). *Note: When MS run speed (F05.00 - F05.07) exceeds 0.630m/s, run at 0.630m/s.*	
F16.08	**Zero-speed threshold**	**0.001 - 0.010 [0.003m/s]**
	When the present run speed ≤ F16.08, the system run speed will be considered as 0. After zero-speed delay signal, the zero-speed signal will output.	
F16.09	**Selection at motor overheat fault**	**0,1 [0]**
	0: When detect that the motor is overheated, alarm E0020 fault (motor overheat) after motor stops. 1: When detect that the motor is overheated, alarm E0020 fault (motor overheat) at once.	
F16.12	**Delay time of run output signal**	**0.00 - 1.00 [0.00s]**
	Note: F16.12 is used to delay the controller running signal (output = No. 2 function) so as to control the HD3L to open the brake.	
F16.13	**UPS running direction auto-determine enable**	**0,1 [0]**
	0: Not enable. 1: Enable. • In UPS mode, HD3L will not run in the direction given by the terminal and auto-detemine the the elevator light-load running direction. • In the UPS mode, HD3L will automatically up, and down, and then run according to the light-load direction of detemining.	
F16.14	**Running min. current limit**	**0 - 100 (F07.11) [20%]**
F16.15	**Running min. detection time**	**0.0 - 5.0 [0.0s]**
	When the elevator run current is less than F16.14 and duration exceeds F16.05, HD3L alarms E0025 fault (too small running current).	
F16.16	**Governor fault detection time**	**0.0 - 2.0 [1.0s]**
	When the governor detection terminal detects the duration of signal reaches F16.16, HD3L alarms E0037 fault (governor fault).	
F16.17	**DC braking current at stop**	**0 - 150 [100%]**
F16.18	**Starting frequency of DC braking current at stop**	**0.20 - 10.00 [0.50Hz]**
F16.19	**Brake release frequency**	**0.00 - 10.00 [0.00Hz]**

6

6.2.15 F17: Fault Protect Parameters

Motor Overheat Fault (F17.00 - F17.02)

Ref. Code	Function Description	Setting Range [Default]
F17.00	**Input voltage at motor overheat**	**0.00 - 10.00 [0.00V]**
F17.01	**Thermistor type**	**0 - 2 [0]**
	0: Not detect the motor overheat (NC). 1: Positive charateristic (PTC). • When AI4 input exceeds F17.00, HD3L alarms E0020 fault (motor overheat). 2: Negative charateristic (NTC). • When AI4 input is less than F17.00, HD3L alarms E0020 fault (motor overheat). *Note: Only when correctly set CN2 and CN3 of I/O board can do the motor overheat detection.*	
F17.02	**Threshold resistance at motor overheat**	**0.0 - 10.0 [5.0kΩ]**

Input and Output Voltage Phase Loss Fault (F17.03 - F17.06)

Ref. Code	Function Description	Setting Range [Default]
F17.03	**The detection base of lack of input**	**0 - 100 [30%]**
F17.04	**The detection time of lack of input**	**0.0 - 5.0 [1.0s]**
	F17.03 is a percentage of HD3L's rated voltage. When HD3L detects certain input voltage does not hit the detect base (F17.03) and exceeds the detect time (F17.04), HD3L alarms E0015 fault (lack of input). • F17.03 or F17.04 = 0 or in the battery driven run mode, HD3L will not detect Input voltage phase loss fault.	
F17.05	**The detection base of lack of output**	**0 - 100 [20%]**
F17.06	**The detection time of lack of output**	**0.0 - 20.0 [3.0s]**
	F17.05 value is a percentage of HD3L's rated current. When HD3L detects certain output current does not hit the detect base (F17.05) and exceeds the detect time (F17.06), HD3L alarms E0016 fault (lack of output). • F17.05 or F17.06 = 0, HD3L will not detect output voltage phase loss fault.	

Motor Fault (F17.07)

Ref. Code	Function Description	Setting Range [Default]
F17.07	**Motor overload protect factor**	**20.0 - 110.0 [100.0%]**
	The motor overload protection factor can be set as 100% when HD3L drives a motor of the same power class. To protect the motor when the motor power is smaller than the standard matched power, user needs to set proper motor overload protection factor (F17.07). The factor can derive from the following formula: $\text{Motor overload protect factor (F17.07)} = \frac{\text{Rated current of motor (F07.02)}}{\text{Rated output current of HD3L}} \times 100\%$	

Fault Auto-reset Function and Fault Relay Action (F17.08 - F17.10)

Auto reset function enables HD3L to reset the fault as per the reset times and interval.

The following faults do not have the auto reset function:

E0008: Power module fault
E0010: Brake unit fault
E0013: Soft start contactor failed
E0014: Current detection fault
E0021: Read/write fault of control board EEPROM
E0022: Read/write fault of keypad EEPROM
E0024: External fault
E0036: Contactor fault

Ref. Code	Function Description	Setting Range [Default]
F17.08	**Fault auto reset times**	**0 - 100 [0]**
F17.09	**Fault auto reset interval**	**2.0 - 20.0 [5.0s/times]**
	When F17.08 = 0, it means "auto reset" is unused and the protective device will be activated in case of fault. • If no other fault is detected within 5 minutes, the auto reset count will be automatically cleared. • On condition of external fault reset, auto reset count will be cleared.	
F17.10	**Faulty relay action**	**00 - 11 [00]**
	Unit: In auto reset process **Ten: In undervoltage process** • 0: Faulty relay doesn't act. • 1: Faulty relay acts. *Note: Relay needs to be set as No. 14 function (controller fault).*	

Fault History (F17.11 - F17.27)

Ref. Code	Function Description	Setting Range [Default]
F17.11	**NO.5 fault type**	**[Actual value]**
F17.12	**Setting freqency at NO.5 fault**	
F17.13	**Output frequency at NO.5 fault**	
F17.14	**DC bus vlotage at NO.5 fault**	
F17.15	**Output voltage at NO.5 fault**	
F17.16	**Output current at NO.5 fault**	
F17.17	**Input terminal status at NO.5 fault**	
F17.18	**Output terminal status at NO.5 fault**	
F17.19	**NO.5 fault interval**	
F17.20	**NO.4 fault type**	
F17.21	**NO.4 fault interval**	
F17.22	**NO.3 fault type**	
F17.23	**NO.3 fault interval**	
F17.24	**NO.2 fault type**	
F17.25	**NO.2 fault interval**	
F17.26	**NO.1 fault type**	
F17.27	**NO.1 fault interval**	
	F17.12 - F17.19 record status parameters of HD3L at the last fault. F17.20 - F17.27 record the type and interval per time of four faults before the latest. The unit of interval is 0.1 hour.	

6.2.16 F18: PWM Parameters

Ref. Code	Function Description	Setting Range [Default]
F18.00	**Carrier frequency**	**1 - 16kHz [Depend on HD3L]**
	Defines the carrier frequency of PWM output wave. • The carrier frequency will affect the operating noise of the motor. The higher the carrier frequency, the lower the noise made by the motor. Please properly set the carrier frequency. • When the value is higher than the factory setting, HD3L should be derated by 5% when per 1kHz is increased compared to the factory setting.	
F18.01	**Carrier freqency auto adjust selection**	**0,1 [0]**
	0: Reserved. 1: Enable.	
F18.02	**PWM overmodulation enable**	**0,1 [1]**
	0: Disabled. 1: Enable.	
F18.03	**PWM overmodulation mode**	**0,1 [0]**
	0: Two phase/three phase swtich. 1: Three phase.	

Controller Power	Setting Range	Default
2.2 - 22kW	1 - 16kHz	8kHz
30 - 45kW	1 - 12kHz	6kHz

6.2.17 F19: Enhance Parameter Group 1

Ref. Code	Function Description	Setting Range [Default]
F19.09	**Frequency and speed switch selection**	**0,1 [0]**
	0: The given way is speed (m/s). 1: The given way is frequency (Hz).	
F19.10	**Multi-speed frequency 0**	**0.00 - F00.03 [0.00Hz]**
F19.11	**Multi-speed frequency 1**	**0.00 - F00.03 [0.00Hz]**
F19.12	**Multi-speed frequency 2**	**0.00 - F00.03 [0.00Hz]**
F19.13	**Multi-speed frequency 3**	**0.00 - F00.03 [0.00Hz]**
F19.14	**Multi-speed frequency 4**	**0.00 - F00.03 [0.00Hz]**
F19.15	**Multi-speed frequency 5**	**0.00 - F00.03 [0.00Hz]**
F19.16	**Multi-speed frequency 6**	**0.00 - F00.03 [0.00Hz]**
F19.17	**Multi-speed frequency 7**	**0.00 - F00.03 [0.00Hz]**
F19.18	**Maintenance operation frequency**	**0.00 - F00.03 [0.00Hz]**
F19.19	**Emergency operation frequency**	**0.00 - F00.03 [0.00Hz]**
F19.20	**Start operation frequency**	**0.00 - F00.03 [0.00Hz]**
F19.44	**SVC5 mode**	**0,1 [1]**
	0: Formal mode. 1: Optimization mode.	
F19.50	**Low-speed variable carrier enable**	**0,1 [1]**
	0: Disenable. 1: Enable.	

Ref. Code	Function Description	Setting Range [Default]
F19.51	**Overload protection percentage of motor**	**150 - 200 [170%]**
F19.52	**Overload protection time of motor**	**0 - 10 [5s]**
	0 - 3: Disenable. 4 - 10: Protection.	
F19.53	**Modify automaticly updated mutual inductance of no-load current**	**0,1 [0]**
	0: Change automatically. 1: No change automatically.	
F19.55	**Enable about the compensation gains of the electric and power generation slip are compensated separately**	**0,1 [0]**
	0: Disenable. 1: Enable.	
F19.56	**Motorized slip compensation gain**	**200.0 - 20.0 [100.0%]**
F19.57	**Power generation slip compensation gain**	**200.0 - 20.0 [100.0%]**
F19.63	**Start DC when emergency operation**	**50 - 100 [100%]**
F19.64	**Start DC brake time when emergency operation**	**0.0 - 3.0 [0.5s]**
F19.65	**Stop DC when emergency operation**	**50 - 100 [100%]**
F19.66	**Stop DC brake time when emergency operation**	**0.0 - 3.0 [1.5s]**
F19.67	**Current search and torque limit when emergency operation**	**40.0 - 200.0 [100.0%]**
F19.68	**Torque boost when emergency operation**	**0.1 - 30.0 [0.1%]**
F19.69	**Torque boost cut-off point when emergency operation**	**0.1 - 50.0 F07.03 (motor rated frequency) [40.0%]**
F19.70	**VF output rated voltage percentage when emergency operation**	**60.0 - 100.0 [100.0%]**
F19.88	**SVC6 I/F control enable**	**0,1 [1]**
	0: Forbidden. 1: Enable.	
F19.89	**SVC6 I/F control frequency cut-off point**	**2.00 - 10.00 [4.00Hz]**
F19.90	**Given SVC6 I/F control torque**	**0 - 200 [100%]**
F19.96	**SVC6 I/F control transition optimization**	**0,1 [1]**
	0: Normal processing. 1: Optimization.	

6.2.18 F20: Enhance Parameter Group 2

Ref. Code	Function Description	Setting Range [Default]
F20.00	**Start DC brake current**	**50 - 150 [100%]**
F20.01	**Duration of start DC brake current**	**0.0 - 3.0 [0.5s]**
F20.02	**DI enable function selection**	**0,1 [0]**
	0: Original plan (only enable signal can output running contactor). 1: New plan (when there is a running command signal, open the running contactor. when the running contactor signal is turned on, if the enable signal is detected thereafter, the operation will continue). • Plan 1 it is used when the controller controls the running contactor and uses the running contactor feedback contact as an enable signal.	
F20.03	**Open time of output contactor**	**0 - 9 [0]**
	0: Keep open. 1 - 9: After the directional signal contactor opens for F20.03, the output contactor is closed after the enable signal is still invalid.	

Ref. Code	Function Description	Setting Range [Default]
F20.04	**Ground detection before running**	**0,1 [0]**
	0: Detection. 1: No detection.	
F20.05	**Brake open frequency**	**0.00 - 10.00 [0.00Hz]**
F20.06	**Brake open current**	**0 - 150 motor rated current [50%]**
F20.07	**Restore customized parameters**	**0 - 9 [0]**
F20.13	**Torque limited when emergency operation**	**70.0 - 200.0 [120.0%]**
F20.14	**UPS operation undervoltage point setting**	**170 - 220 [190V]**
F20.15	**Emergency operation parameters**	**000 - 110 [0]**
	Unit: Reserved **Ten: Torque limited when emergency operation** • 0: F20.19 no functional. • 1: F20.19 functional. **Hundred: Emergency operation mode determine** • 0: F00.01 ok. • 1: VF control.	
F20.17	**Search speed of light load current method when emergecy operation**	**0.020 - 0.200 [0.150m/s]**
F20.18	**Search time of light-load current method when emergency operation**	**0.300 - 3.000 [1.000m/s]**
F20.19	**Torque limited when emergency operation**	**70.0 - 200.0 [100.0%]**

6.3 Group Y: Manufacturer Parameters

The Group y is the manufacturer parameters group for commissioning at the factory before delivery.

Chapter 7 Elevator Application Guidance

7.1 Basic Commissioning Procedures

7.1.1 System Analysis and Wiring

It is recommended to analyze the actual application requirements before the wiring design.

Basic configuration for elevator system with HD3L is shown in Figure 7–1.

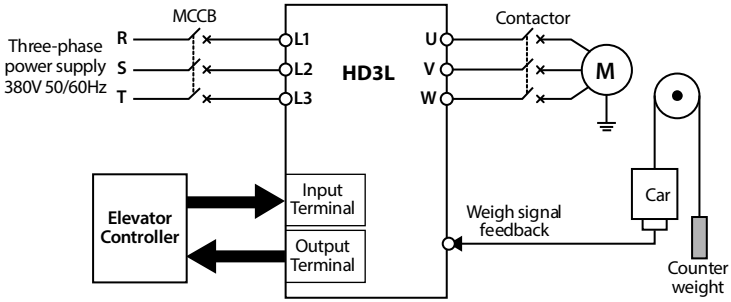

Figure 7–1 Elevator system

7.1.2 Set Basic Parameters

1. Correctly set F00.01 (control mode).
2. Set group F07 for motor.
3. Set F00.02 (rated speed of elevator) and F00.04 (mechanical parameters of motor) according to the elevator requirement and motor parameters.
4. Set digital I/O terminal parameters of group F12 according to the actual wiring.
5. Set the parameter according to the actual running mode:

- **Terminal MS running mode:** Set MS parameters of group F05 according to the actual requirement of elevator and the controller. Set Acc/Dec curve parameters of group F03 according to the elevator speed.
- **Terminal analogue running mode:** Set analogue curve parameters of group F04 and analogue I/O terminal parameters of group F13 according to the actual requirement of elevator and the controller. The bigger Acc/Dec curve parameters of group F03 are set, the quicker HD3L catch the speed command of elevator controller.

7.1.3 Motor Auto-tuning

1. Set F00.05 as 0 (keypad control).

2. Set F07.06 as 1 (stationary auto-tuning) or 2 (rotary auto-tuning), then press **RUN** key to start parameter auto-tuning. The motor will rotate at rotary auto-tuning, while it will not rotate at stationary auto-tuning.

Note:

1. The crane car is needed for the rotary auto-tuning but not for the stationary auto-tuning.

2. When auto-tuning, it needs open the run contactor; If at rotary auto-tuning, it needs open the brake contactor manually too.

7.1.4 Inspection Running

Preparation Before Inspection Running

1. After motor parameter auto-tuning, motor output U/V/W connections and encoder connection are not changed.

2. Set F03.06 (inspection Acc speed) and F03.07 (inspection Dec speed).

Inspection Running

1. If the actual running direction of motor is not the command direction, set F00.08 (run direction) = 1.

2. Make sure that the motor can run normally.

3. Make sure the motor can run normally and the signals of the brake and power circuit etc. can act normally, then it will do high speed running.

7.1.5 High Speed Running

1. Give the floor normal run command so that the elevator can run normally. Then set group F02 of start&stop parameters, start stopping parameters, adjust starting&stopping brake and motor running time sequence to make sure that the elevator does not shake at start&stop.

2. If the elevator has slight shake at running, properly adjust group F08.

3. To adjust leveling precision, Acc/Dec curve (group F03) can adjust terminal MS control (F00.05 = 2) to unify level and adjust F03.13 (stop Dec jerk) to make leveling precision.

7.2 Terminal MS Run Application

The elevator controller can calculate the motor present running direction (digital) and objective speed (digital) according to the elevator control logic and send them to HD3L. HD3L receives the objective speed of MS form and calculate the speed curve according to the S-curve parameter setting, then control the motor to run.

Example: A certain elevator with rated speed of 1.750m/s uses a controller in terminal MS control (F00.05 = 2).

The brake of elevator controller and the contactor are controlled by signal which comes from HD3L. Receiving signal of “HD3L is running”, the brake opens; Receiving “HD3L is in zero-speed running”, the brake closes.

The inspection running is controlled by inspection MS command of elevator controller, and the running speed is obtained by speed combination of MS terminal.

Control Part Connection

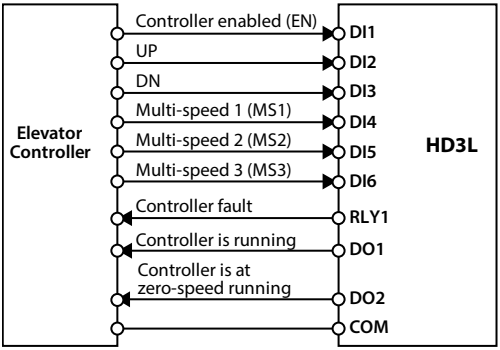

Figure 7–2 Terminal MS running connection

Set Parameter

The setting content of terminal MS general function code is shown as Table 7-1 and setting content of special function code is shown as Table 7-2.

Table 7-1 General parameter

Ref. Code	Function	Value	Remark
F00.00	Motor type	Depend on actual value	
F00.01	Motor control mode	Depend on actual value	
F00.02	Rated speed of elevator	Depend on actual value	
F00.03	Max. output freqency of HD3L	Depend on actual value	
F00.04	Mechanical parameters of motor	Depend on actual calculate value	
F07.00	Rated power of motor	Depend on actual value	Motor nameplate parameters
F07.01	Rated voltage of motor	Depend on actual value	
F07.02	Rated current of motor	Depend on actual value	
F07.03	Rated frequency of motor	Depend on actual value	
F07.04	Rated RPM of motor	Depend on actual value	
F08.00	ASR proportional gain 1	500	Adjust according to running effect. Generally use the default value
F08.01	ASR integral coefficient 1	500	
F08.02	ASR proportional gain 2	500	
F08.03	ASR integral coefficient 2	500	
F08.04	ASR swithcing frequency 1	10.00Hz	
F08.05	ASR swithcing frequency 2	15.00Hz	
F08.09	UP electrical torque limit	180.0%	Adjust according to running effect. Generally use the default value
F08.10	DN electrical torque limit	180.0%	
F08.11	UP regenerative torque limit	180.0%	
F08.12	DN regenerative torque limit	180.0%	

Table 7-2 Terminal MS run parameter

Ref. Code	Function	Value	Remark
F00.05	Operating mode	2	Terminal MS control
F02.02	Retention time of start zero-speed	0.5s	Adjust according to the situation of running contactor and brake at motor start&stop
F02.06	Retention time of stop zero-speed	0.5s	
F03.00	Acc speed	0.700m/s^2	Set according to the elevator speed and running effect
F03.01	Start Acc jerk	0.350m/s^3	
F03.02	End Acc jerk	0.600m/s^3	
F03.03	Dec speed	0.700m/s^2	
F03.04	Start Dec jerk	0.600m/s^3	
F03.05	End Dec jerk	0.350m/s^3	
F03.06	Inspection Acc speed	0.200m/s^2	
F03.07	Inspection Dec speed	1.000m/s^2	
F03.13	Stop Dec jerk	0.350 m/s^3	
F05.00	Multi-speed 0	0	As actual value
F05.01	Multi-speed 1	Re-leveling speed	
F05.02	Multi-speed 2	Creeping speed	
F05.03	Multi-speed 3	Battery driven speed	
F05.04	Multi-speed 4	Inspection speed	
F05.05	Multi-speed 5	Normal low speed	
F05.06	Multi-speed 6	Normal mid speed	
F05.07	Multi-speed 7	Normal high speed	
F12.01	DI1 function	1	Controller enabled (EN)
F12.02	DI2 function	2	UP
F12.03	DI3 function	3	DN
F12.04	DI4 function	4	MS1
F12.05	DI5 function	5	MS2
F12.06	DI6 function	6	MS3
F12.15	DO1 function	2	Controller is running
F12.16	DO2 function	3	Controller is at zero-speed running
F12.17	RLY1 function	14	Controller fault
F16.07	Multi-speed inspection	4	Multi-speed inspection selection

7.3 Terminal Analogue Run Application

The elevator controller can calculate the motor present running direction (digital) and running speed according (analogue) to the elevator control logic and send them to HD3L respectively in the form of digital and analogue. HD3L control the motor to run according to the controller's command and speed.

Example: A certain elevator with rated speed of 1.750m/s uses a controller in terminal analogue control (F00.05 = 1).

The brake and the running contactor are controlled by the elevator controller. The controller sends the direction signal to HD3L in the form of digital and output the running speed to drive in the form of analogue.

Use analogue weighing device and AI1 as analogue speed setting and AI2 as analogue weigh.

Control Part Connection

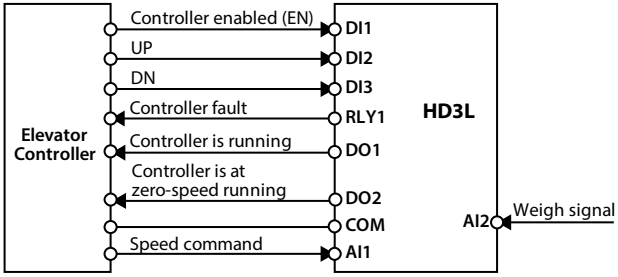

Figure 7–3 Terminal analogue running connection

Set Parameter

Refer to Table 7-1 for the general function code. The terminal analogue special function code setting content is shown as Table 7-3.

Table 7-3 Terminal analogue run parameter

Ref. Code	Function	Value	Remark
F00.05	Operating mode	1	Terminal analogue control
F02.02	Retention time of start zero-speed	0.5s	Adjust according to the situation of running contactor and brake at motor start&stop
F02.06	Retention time of stop zero-speed	0.5s	
F03.00	Acc speed	0.700m/s^2	If the controller can not fast-track speed command of the elevator controller, increase the values of F03.00 - F03.05
F03.01	Start Acc jerk	0.350m/s^3	
F03.02	End Acc jerk	0.600m/s^3	
F03.03	Dec speed	0.700m/s^2	
F03.04	Start Dec jerk	0.600m/s^3	
F03.05	End Dec jerk	0.350m/s^3	

Ref. Code	Function	Value	Remark
F04.00	Setting curve	00000	Change according to the characteristics of analogue curve
F04.01	Line 1 min. setting	0.0%	
F04.02	Corresponding value of line 1 min. setting	0.0%	
F04.03	Line 1 max. setting	100.0%	
F04.04	Corresponding value of line 1 max. setting	100.0%	
F04.05	Line 2 min. setting	0.0%	
F04.06	Corresponding value of line 2 min. setting	0.0%	
F04.07	Line 2 max. setting	100.0%	
F04.08	Corresponding value of line 2 max. setting	100.0%	
F06.00	Pre-torque selection	1	Analogue weighing feedback
F06.01	Up pre-torque bias	50.0%	Set according to actual situation and debug according to running effect
F06.02	Down pre-torque bias	50.0%	
F06.03	Up electrical pre-torque gain	1.000	
F06.04	Up brake pre-torque gain	1.000	
F06.05	Down electrical pre-torque gain	1.000	
F06.06	Down brake pre-torque gain	1.000	
F12.01	DI1 function	1	Controller enabled (EN)
F12.02	DI2 function	2	UP
F12.03	DI3 function	3	DN
F12.15	DO1 function	2	Controller is running
F12.16	DO2 function	3	Controller is at zero-speed running
F12.17	RLY1 function	14	Controller fault
F13.00	AI1 function	1	Speed setting
F13.01	AI2 function	2	Weighing signal
F13.04/F13.07	AI1/AI2 bias	0.0%	Adjust according to actual situation
F13.05/F13.08	AI1/AI2 gain	1.00	
F13.06/F13.09	AI1/AI2 filter time	0.05s	

7.4 Power-off Battery Driven Run Application

During using elevator, if the system power is off, passengers will be shut in car.

HD3L provide battery driven run mode to resolve this problem.

Connection

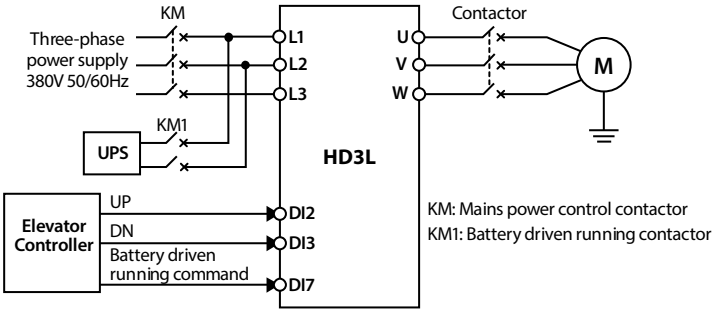

Figure 7–4 Battery driven run connection

Running Time Sequence

1. When mains power fails, the KM (mains power control contactor) opens, and elevator controller outputs battery driven run command (BAT), and controls KM1 to close.

2. After some time delay, the elevator controller outputs running command (UP/DN). When HD3L receives the command, the running contactor will be closed and the brake will be opened. HD3L accelerates at the line rate of F03.08 (battery driven Acc speed) till the speed of F05.09 (battery driven run speed).

3. When the elevator runs near a leveling area, the elevator controller cuts off the battery driven run command (BAT), and HD3L begins to Dec at the rate of F03.09 (battery driven Dec speed) to stop.

4. The controller outputs the brake close signal after the speed decelerates to zero. After some time delay, controller cuts off the run command (UP/DN) and HD3L releases the contactor. A complete battery driven running process is finished.

Note:

1. The battery voltage should be bigger than150VDC to ensure normal running.

2. In battery driven running mode, the controller does not detect the Input voltage phase failure.

Chapter 8 Troubleshooting and Maintenance

8.1 Troubleshooting

If a fault occurs, the keypad will display the fault alarm status. Meanwhile, faulty relay acts, accordingly HD3L stops output and the motor coasts to stop.

When fault alarm occurs, user should record the fault in detail and take proper action according to the Table 8-1. If technical help is needed, contact the suppliers or directly call Shenzhen Hpmont Technology Co., Ltd.

After the fault is eliminated, reset HD3L by any of the following methods:

1. Keypad reset.
2. External reset terminal (DI terminal = No. 16 function).
3. Communication fault reset.
4. Switch on HD3L after completely power off.

Table 8-1 Fault and counter-measures

Fault		Reasons	Countermeasures
Lu	DC bus undervoltage	• At the begining of power on and at the end of power off • Input voltage is too low • Improper wiring leads to undervoltage of hardware	• It is normal status of powering on and powering off • Check input power voltage • Check wiring and wire HD3L properly
E0001	Acc overcurrent	• Improper connection between controller and motor • Improper motor parameters • The rating of the used HD3L is too small • Acc/Dec time is too short	• Connect HD3L and motor properly • Set correct motor parameters • Select controller with higher rating • Set proper Acc time and Dec time
E0002	Dec overcurrent		
E0003	Constant speed overcurrent		
E0004	Acc over voltage	• Input voltage is too high • Deceleartion time is too short • Improper wiring leads to overvoltage of hardware	• Check power input • Set a proper value for Dec time • Check wiring and wire HD3L properly
E0005	Dec over voltage		
E0006	Constant speed over voltage		
E0008	Power module fault	• Short circuit between phases output or the ground • Output current is too high • Power module is damaged	• Check the connection and connect the wire properly • Check the connection and mechanism • Contact the supplier for repairing
E0009	Heatsink overheat	• Ambient temperature is too high • Poor external ventilation of HD3L • Fan fault • Fault occurs to temperature detection circuit	• Use controller with higher power capacity • Improve the ventilation around HD3L • Replace the cooling fan • Seek technical support
E0010	Braking unit fault	• Circuit fault of braking unit	• Seek technical support

Fault		Reasons	Countermeasures
E0011	CPU fault	• CPU abnormal	• Detect at power on after completely power outage • Seek technical support
E0012	Parameter auto-tuning fault	• Parameter auto-tuning is timeout	• Check the motor connection • Input correct nameplates parameters • Seek technical support
E0013	Soft start contactor failed	• Contactor fault • Control circuit fault	• Replace the contactor • Seek technical support
E0014	Current detection fault	• Current detection circuit is damaged	• Contact the supplier for repairing
E0015	Input voltage phase loss	• For three-phase input HD3L, input voltage phase loss fault occurs to power input	• Check the three-phase power input • Seek technical support
E0016	Output voltage phase loss	• Output voltage phase disconnection or loss • Three-phase load of HD3L is severely unbalanced	• Check the connection between HD3L and motor • Check the quality of motor
E0017	Controller overload	• Acc time is too short • Improper setting of V/f curve or torque boost leads to over current • Mains supply voltage is too low • Motor load is too high	• Adjust Acc time • Adjust V/f curve or torque boost • Check mains supply voltage • Use controller with proper power rating
E0018	Excessive speed deviation	• Brake fault or contactor fault • PG pulse number fault • Improper setting F05.19, F05.20 • Inadequate controller torque • Speed-loop PI parameter setting is incorrect	• Change contactor • Set proper PG P/R • Correct the setting of F05.19, F05.20 • Select HD3L with biger capacity • Correctly set speed-loop PI parameter
E0019	Motor overload	• Improper setting of V/f curve • Mains supply voltage is too low • Overload protection factor of motor is not set properly • Motor locked-rotor or overload	• Adjust V/f curve • Check the power input • Properly set the overload protection factor of motor • Check the load and mechanical transmission devices
E0020	Motor overheat	• Motor overheat • Motor overheat terminal (DI or AI terminal) connects incorrectly • The setting of motor paramteter is incorrect	• Reduce the load; Increase the Acc/Dec time; Repaire or replace the motor • Detect whether the overheat detection input signal is correct • Set the motor parameter according to the nameplate
E0021	Read/write fault of control board EEPROM	• Memory circuit fault of control board EEPROM	• Contact the supplier for repairing
E0022	Read/write fault of keypad EEPROM	• Memory circuit fault of keypad EEPROM	• Replace the keypad • Contact the supplier for repairing

Fault		Reasons	Countermeasures
E0023	Faulty setting of parameters	• The power rating between motor and controller is too different • Improper setting of motor parameters	• Select a controller with suitable power rating • Set correct value of motor parameters
E0024	Fault of external equipment	• Fault terminal of external equipment operates	• Check external equipment
E0025	Too small running current	• Improper setting of F16.14, F16.15	• Correct the setting of F16.14, F16.15 • Check the connection between HD3L and motor • Detect HD3L whether output • Detect whether the output contactor work is nomal
E0028	SCI communication timeout	• Connection fault of communication cable • Disconnected or not well connected	• Check the connection
E0029	SCI communication error	• Connection fault of communication cable • Disconnected or not well connected • Communication setting error • Communication data error	• Check the connection • Check the connection • Correctly set the communication format and the baud rate • Send the data according to Modbus protocol
E0032	Motor over speed	• PG pulse number fault • Inadequate controller torque • Speed-loop PI parameter setting is incorrect	• Set proper PG pulse number • Select biger capacity controller • Correctly set speed-loop PI parameter
E0036	Contator fault	• Contactor damaged • Feedback contact connection problem	• Change the contactor • Check the connection
E0037	Governor fault	• Check external governor • Check feedback signal	• Replace governor • Replace circuit

Note:

E0022 does not affect normal run of controller.

8.2 Maintenance

Factors such as ambient temperature, humidity, PH, dust, oscillation, internal component aging, wear and tear will give rise to the occurrence of potential faults. Therefore, it is necessary to conduct daily maintenance to the controller.

- If HD3L has been transported for a long distance, check whether the components of the controller are complete and the screws are well tightened.
- Periodically clean the dust inside HD3L and check whether the screws are loose.

Danger

- Only a trained and qualified professional person can maintain the controller.
- Maintenance personnel should take off all metal jewellery before carrying out maintenance or internal measurements in the controller. Suitable clothes and tools must be used.
- High voltage exists when the controller is powered up or running.
- Checking and maintaining can only be done after AC power of HD3L is cut off and wait for at least 10 minutes. The cover maintenance can only be done after ensured that the charge indicator inside the controller and the indicators on the keypad are off and the voltage between power terminals (+) and (-) is below 36V.

Warning

- For HD3L with more than 2 years storage, please use voltage regulator to increase the input voltage gradually.
- Do not leave metal parts like screws or pads inside the controller.
- Do not make modification on the inside of controller without instruction from the supplier.
- There are IC components inside the controller, which are sensitive to static electricity. Directly touch the components on the PCB board is forbidden.

Daily Maintenance

HD3L must be operated in specified environment (refer to section 3.2, on page11). Besides, some unexpected accidents may occur during running.

Therefore maintain it according to table below. To prolong the lifetime of HD3L, keep good operating environment, record the daily run data and detect any abnormal behavior.

Table 8-2 Daily checking items

Items	Content	Criteria
Running environment	Temperature and humidity	-10 - +40℃, derating at 40 - 50℃ Less than 95%RH, non-condensing
	Dust and water dripping	No conductive dust accumulating, no water dripping
	Gas	No strange smell
HD3L	Oscillation and heating	Stable oscillation and proper temperature
	Noise	No abnormal sound
Motor	Heating	No overheat
	Noise	Low and regular noise
Running status parameters	Output current	Within rated range
	Output voltage	Within rated range

Periodical Maintenance

Customer should check HD3L every 3 to 6 months according to the actual environment so as to avoid hidden problems and make sure the controller runs well for a long time.

General Inspection:

- Check whether the screws of control terminals are loose. If so, tighten them with a screw driver;
- Check whether the main circuit terminals are properly connected; Whether the copper bar and mains cables are overheated;
- Check whether the power cables and control cables are damaged, check especially for any wear on the cable tube;
- Check whether the insulating tapes around the cable lugs are stripped, and for signs of overheating near terminations;
- Clean the dust on PCBs and air ducts with a vacuum cleaner.

Note:

1. Dielectric strength test of HD3L has already been conducted in the factory. Do not do the test again. Otherwise, HD3L might be damaged.

2. If insulation test to the motor is necessary, it should be done after input terminals U/V/W of motor have been detached from HD3L. Otherwise, HD3L will be damaged.

3. For controllers that have been stored for a long time, they must be powered up every 2 years. When supplying AC power to the controller, use a voltage regulator to gradually raise the input voltage to rated input voltage at least 5 hours.

Replacing Damaged Parts

The components that are easily damaged are: Cooling fan and electrolytic capacitors of filters.

Their lifetime depends largely on their application environment and preservation. Users can decide the time when the components should be replaced according to their service time.

Easily Damaged	Cooling fan	Electrolytic capacitors
Life	60, 000 hours	50, 000 hours
Possible Cause of Damages	Wear of the bearing, aging of the fan vanes	High ambient temperature, aging of electrolyte and large pulse current induced by rapid changing loads
Criteria	After the controller is switched off, check if the abnormal conditions such as crack existing on fan vanes and other parts. When the controller is switched on, check if controller running is normal, and check if there is any abnormal oscillation	Check if frequent over-current or overvoltage failures occur during controller start-up with load. Check if there is any leakage of liquids. Check if the safety valve protrudes. Measure the static capacitance and insulation resistance

Unwanted Controller Recycling

When disposing HD3L, pay attention to the following factors:

- The capacitors may explode if they are burnt.
- Poisonous gas may be generated when the plastic parts like front covers are burnt.
- Disposing method: Dispose unwanted controllers as industrial waste.

Chapter 9 Accessories

9.1 Keypad Installation Assembly

The keypad installation assembly includes mounting base and extenion cable.

Mounting Base

The keypad mounting base is an accessory. If needed, please order goods.

Model: HD-KMB. The mounting base and its size are shown as Figure 9–1 and the unit is mm.

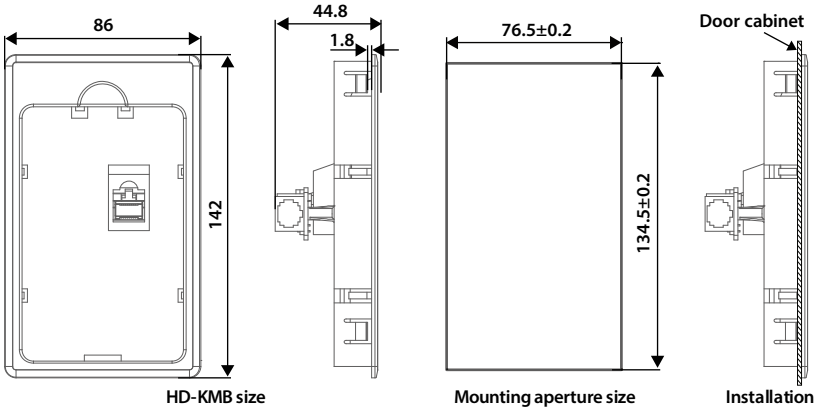

Figure 9–1 Mounting base and its size

Extenion Cable

The keypad extenion cable is an accessory. If needed, please order goods.

The models are as follows:

- 1m extenion cable to keypad: HD-CAB-1M
- 2m extenion cable to keypad: HD-CAB-2M
- 3m extenion cable to keypad: HD-CAB-3M
- 6m extenion cable to keypad: HD-CAB-6M

9

9.2 Reactor Selection

Table 9-1 AC/DC reactor selection

Model	AC Input Reactor		AC Output Reactor		DC Reactor	
	Model	Parameter (mH-A)	Model	Parameter (mH-A)	Model	Parameter (mH-A)
HD3L-4T037	HD-AIL-4T037	0.19-75	HD-AOL-4T037	0.08-80	HD-DCL-4T037	0.35-100
HD3L-4T045	HD-AIL-4T045	0.16-90	HD-AOL-4T045	0.06-100	HD-DCL-4T045	0.29-120

9.3 Braking Resistor

The braking resistor selection is shown as Table 9-2. If needed, please order goods.

The connection of braking resistor is shown as section 4.3.2 Supply and Motor Connection (on page 18).

Table 9-2 Recommendation for the braking resistor

Model	Motor (kW)	Braking Resistor Value (Ω)			Braking Resistor Power (kW)
		Min	Max	Recommended	
HD3L-2D2P2	2.2	26	130	50	1
HD3L-2D3P7	3.7	26	50	30	1.2
HD3L-2D5P5	5.5	17	27	20	1.6
HD3L-2D7P5	7.5	11	20	15	2
HD3L-2D011	11	11	20	15	3.2
HD3L-2T015	15	10	16	12	4
HD3L-2T018	18.5	10	16	12	5
HD3L-2T022	22	7	10	9	6.4
HD3L-2T030	30	7	10	9	8
HD3L-4T2P2	2.2	56	210	100	1
HD3L-4T3P7	3.7	56	144	80	1.2
HD3L-4T5P5	5.5	56	100	70	1.6
HD3L-4T7P5	7.5	56	72	64	2
HD3L-4T011	11	34	48	40	3.2
HD3L-4T015	15	34	41	36	4
HD3L-4T018	18.5	17	31	24	5
HD3L-4T022	22	17	27	20	6.4
HD3L-4T030	30	11	20	15	8
HD3L-4T037	37	10	16	12	10
HD3L-4T045	45	7	10	9	15

Note:

1. Please select braking resistor based on the above table.
Bigger resistor can protect the braking system in faulty condition, but oversized resistor may bring a capacity decrease, leading to over voltage protection.

2. The braking resistor should be mounted in a ventilated metal housing to prevent inadvertent contact during it works, for the temperature is high.

9.4 Power Regenerative Unit

Please refer to "HDRU Series Power Regenerative Unit User Manual" for more details.

Appendix A Parameter

Attributes are Changed:

X: It denotes that the setting of this parameter cannot be modified when the controller is in run status.

O: It denotes that the setting of this parameter can be modified when the controller is in run status.

*: It denotes that the value of this parameter is the actual value which cannot be modified.

Ref. Code	Function	Setting Range	Default	Unit	Attribute	Setting
d00: Status Display Parameters, on pages 42 - 43						
d00.00	Controller series	HD3L	Actual		*	
d00.01	Software version of DSP	0.00 - 9.99	Actual		*	
d00.02	Special software version of DSP	0.00 - 9.99	Actual		*	
d00.03	Software version of keypad	0.00 - 9.99	Actual		*	
d00.04	Elevator running status	Display in 16-bit binary: Bit0: Controller enable Bit1: Inspection run Bit2: MS run Bit3: Analogue run Bit4 - Bit7: Reserved Bit8: Brake feedback input Bit9: Contactor feedback input Bit10: Up forced speed switch input Bit11: Down forced speed switch input Bit12: MS terminal 1 Bit13: MS terminal 2 Bit14: MS terminal 3 Bit15: Battery driven run	Actual		*	
d00.05	Rated current of HD3L	0.1 - 999.9A	Actual		*	
d00.06	Controller status	Display in 16-bit binary: Bit0: Controller fault Bit1: Run/stop Bit2: UP Bit3: DN Bit5&Bit4: Acceleration/ deceleration/constant Bit6: Zero-speed signal Bit7: Run at zero-speed Bit8: Auto-tuning Bit9: Speed within FAR Bit10: Ready to run Bit11: Brake output Bit12: Contactor output Bit13: Stop signal	Actual		*	

A

Ref. Code	Function	Setting Range	Default	Unit	Attribute	Setting
d01: Drive Status Parameters, on pages 43 - 44						
d01.00	Control mode	0 - 5	Actual		*	
d01.01	Setting speed (m/s)	0.000 - 9.999	Actual		*	
d01.02	Setting speed (after Acc/Dec) (m/s)	0.000 - 9.999	Actual		*	
d01.03	Feedback speed (m/s)	0.000 - 9.999	Actual		*	
d01.04	Setting frequency (Hz)	0.01 - 100.00Hz	Actual		*	
d01.05	Setting frequency (after Acc/Dec)	0.01 - 100.00Hz	Actual		*	
d01.06	Output frequency	0.01 - 100.00Hz	Actual		*	
d01.07	Setting RPM	0 - 24000RPM	Actual		*	
d01.08	Running RPM	0 - 24000RPM	Actual		*	
d01.10	Output voltage	0 - 999V	Actual		*	
d01.11	Output current	0.1 - 999.9A	Actual		*	
d01.12	Output torque	0.0 - 300.0% (motor rated torque)	Actual		*	
d01.13	Output power	0.0 - 200.0% (motor rated power)	Actual		*	
d01.14	DC bus voltage	0 - 999V	Actual		*	
d02: Analogue Status Display Parameters, on pages 44 - 45						
d02.00	AI1 voltage	0.00 - 10.00V	Actual		*	
d02.01	AI1 voltage (after calculating)	0.00 - 10.00V	Actual		*	
d02.02	AI2 voltage	0.00 - 10.00V	Actual		*	
d02.03	AI2 voltage (after calculating)	0.00 - 10.00V	Actual		*	
d02.04	AI3 voltage	0.00 - 10.00V	Actual		*	
d02.05	AI3 voltage (after calculating)	0.00 - 10.00V	Actual		*	
d02.06	AI4 voltage	0.00 - 10.00V	Actual		*	
d02.07	AI4 voltage (after calculating)	0.00 - 10.00V	Actual		*	
d02.08	AO1 output	0.00 - 10.00V	Actual		*	
d02.09	AO2 output	0.00 - 10.00V	Actual		*	
d03: Running Status Parameters, on pages 45 - 46						
d03.00	Heatsink temperature	0.0 - 999.9℃	Actual		*	
d03.01	Input terminal status	Display in 16-bit binary: Bit11 - Bit0 correspond to DI12 - DI1 0: Disconnects with common terminal 1: Connects with common terminal	Actual		*	
d03.02	Output terminal status	Display in 16-bit binary: Bit5 - Bit2 correspond to RLY4 - RLY1 Bit1 - Bit0 correspond to DO2 - DO1	Actual		*	

Ref. Code	Function	Setting Range	Default	Unit	Attribute	Setting
		Positive logic: 0 stands for invalid while 1 stands for valid Negative logic: 0 stands for valid while 1 stands for invalid				
d03.03	Modbus status	0: Normal 1: Communication timeout 2: Incorrect data frame head 3: Incorrect data frame checking 4: Incorrect data frame content	Actual		*	
d03.04	Total time at power-on (hour)	0 - 65535	Actual		*	
d03.05	Total running time (hour)	0 - 65535	Actual		*	
d03.06	Running times	0 - 65535	Actual		*	
d03.07	Present fault	0 - 100	Actual		*	
F00: Basic Parameters, on pages 46 - 47						
F00.00	Motor type	0: Asynchronous motor	0	1	×	
F00.01	Motor control mode	0: V/f control 1: SVC control 5: SVC5 control 6: SVC6 control	1	1	×	
F00.02	Rated speed of elevator	0.100 - 4.000m/s	1.500m/s	0.001m/s	×	
F00.03	Max. output frequency of HD3L	5.00 - 100.00Hz	50.00Hz	0.01Hz	×	
F00.04	Mechanical parameters of motor	10.0 - 6000.0	60.0	0.1	×	
F00.05	Operating mode	0: Keypad control 1: Terminal analogue control 2: Terminal MS control	0	1	×	
F00.06	M-key function	0: Reserved 1: UP/DN switch	0	1	○	
F00.07	Speed setting of keypad	0.000m/s - F00.02	1.500m/s	0.001m/s	○	
F00.08	Run direction	0: The same as run command 1: Opposite to run command	0	1	×	
F01: Protection of Parameters, on pages 47 - 48						
F01.00	User's password	00000 - 65535	00000	1	○	
F01.01	Menu mode	0: Full menu mode 1: Checking menu mode (display parameters different from factory setting only)	0	1	○	
F01.02	Function code parameter initialization	0: No operation 1: Restore to factory settings 2: Parameter download 3: Clear fault information	0	1	×	

A

Ref. Code	Function	Setting Range	Default	Unit	Attribute	Setting
F01.02	Function code parameter initialization	0: No operation 1: Restore to factory settings 2: Parameter download 3: Clear fault information	0	1	×	
F01.03	Keypad EEPROM parameter initialization	0: No operation 1: Parameter upload	0	1	○	
F02: Start&Stop Parameters, on pages 48 - 49						
F02.00	Start delay time	0.000 - 4.999s	0.000s	0.001s	×	
F02.01	Brake open delay time	0.000 - 4.999s	0.000s	0.001s	×	
F02.02	Retention time of start zero-speed	0.000 - 4.999s	0.000s	0.001s	×	
F02.03	Start speed	0.000 - 0.400m/s	0.000m/s	0.001m/s	×	
F02.04	Retention time of start speed	0.000 - 4.999s	0.000s	0.001s	×	
F02.05	Brake close delay time	0.000 - 4.999s	0.000s	0.001s	×	
F02.06	Retention time of stop zero-speed	0.000 - 4.999s	0.000s	0.001s	×	
F02.07	Contactor close delay time	0.000 - 4.999s	0.000s	0.001s	×	
F02.08	Start ramp time	0.000 - 2.000s *0.000: Ramp invalid*	0.000s	0.001s	×	
F03: Acc/Dec Parameters, on pages 49 - 50						
F03.00	Acc speed	0.020 - 9.999m/s^2	0.700m/s^2	0.001m/s^2	×	
F03.01	Start Acc jerk	0.020 - 9.999m/s^3	0.350m/s^3	0.001m/s^3	×	
F03.02	End Acc jerk	0.020 - 9.999m/s^3	0.600m/s^3	0.001m/s^3	×	
F03.03	Dec speed	0.020 - 9.999m/s^2	0.700m/s^2	0.001m/s^2	×	
F03.04	Start Dec jerk	0.020 - 9.999m/s^3	0.600m/s^3	0.001m/s^3	×	
F03.05	End Dec jerk	0.020 - 9.999m/s^3	0.350m/s^3	0.001m/s^3	×	
F03.06	Inspection Acc speed	0.020 - 9.999m/s^2	0.200m/s^2	0.001m/s^2	×	
F03.07	Inspection Dec speed	0.020 - 9.999m/s^2	1.000m/s^2	0.001m/s^2	×	
F03.08	Battery driven Acc speed	0.020 - 9.999m/s^2	1.000m/s^2	0.001m/s^2	×	
F03.09	Battery driven Dec speed	0.020 - 9.999m/s^2	1.000m/s^2	0.001m/s^2	×	
F03.10	Motor auto-tuning Acc speed	0.020 - 9.999m/s^2	0.100m/s^2	0.001m/s^2	×	
F03.11	Motor auto-tuning Dec speed	0.020 - 9.999m/s^2	0.100m/s^2	0.001m/s^2	×	
F03.12	Abnormal Dec speed	0.020 - 9.999m/s^2	1.000m/s^2	0.001m/s^2	×	
F03.13	Stop Dec jerk	0.020 - 9.999m/s^3	0.350m/s^3	0.001m/s^3	×	
F04: Analogue Curve Parameters, on pages 50 - 51						
F04.00	Setting curve	Unit: AI1 setting curve Ten: AI2 setting curve Hundred: AI3 setting curve Thousand: AI4 setting curve 0: Line 1 1: Line 2	0000	1	×	
F04.01	Line 1 min. setting	0.0% - F04.03	0.0%	0.1%	○	

Ref. Code	Function	Setting Range	Default	Unit	Attribute	Setting
F04.02	Corresponding value of line 1 min. setting	0.0 - 100.0%	0.0%	0.1%	○	
F04.03	Line 1 max. setting	F04.01 - 100.0%	100.0%	0.1%	○	
F04.04	Corresponding value of line 1 max. setting	0.0 - 100.0%	100.0%	0.1%	○	
F04.05	Line 2 min. setting	0.0% - F04.07	0.0%	0.1%	○	
F04.06	Corresponding value of line 2 min. setting	0.0 - 100.0%	0.0%	0.1%	○	
F04.07	Line 2 max. setting	F04.05 - 100.0%	100.0%	0.1%	○	
F04.08	Corresponding value of line 2 max. setting	0.0 - 100.0%	100.0%	0.1%	○	
F05: Speed Parameters, on pages 51 - 53						
F05.00	Multi-speed 0	0.000m/s - F00.02	0.000m/s	0.001m/s	○	
F05.01	Multi-speed 1	0.000m/s - F00.02	0.000m/s	0.001m/s	○	
F05.02	Multi-speed 2	0.000m/s - F00.02	0.000m/s	0.001m/s	○	
F05.03	Multi-speed 3	0.000m/s - F00.02	0.000m/s	0.001m/s	○	
F05.04	Multi-speed 4	0.000m/s - F00.02	0.000m/s	0.001m/s	○	
F05.05	Multi-speed 5	0.000m/s - F00.02	0.000m/s	0.001m/s	○	
F05.06	Multi-speed 6	0.000m/s - F00.02	0.000m/s	0.001m/s	○	
F05.07	Multi-speed 7	0.000m/s - F00.02	0.000m/s	0.001m/s	○	
F05.08	Inspection run speed	0.000 - 0.630m/s	0.200m/s	0.001m/s	○	
F05.09	Battery driven run speed	0.000m/s - F00.02	0.100m/s	0.001m/s	○	
F05.10	Up forced speed switch detection value	0.0 - 100.0% (F00.02)	97.0%	0.1%	○	
F05.11	Down forced speed switch detection value	0.0 - 100.0% (F00.02)	97.0%	0.1%	○	
F05.12	FDT1	0.0 - 100.0% (F00.02)	90.0%	0.1%	○	
F05.13	FDT2	0.0 - 100.0% (F00.02)	90.0%	0.1%	○	
F05.14	FDT1 delay level	0.0 - 100.0% (F00.02)	1.0%	0.1%	○	
F05.15	FDT2 delay level	0.0 - 100.0% (F00.02)	1.0%	0.1%	○	
F05.16	Speed within FAR range	0.0 - 20.0% (F00.02)	1.0%	0.1%	○	
F05.17	Over-speed setting	80.0 - 120.0% (F00.02)	115.0%	0.1%	×	
F05.18	Over-speed detection time	0.0 - 2.0s *0.0: Not detect motor over speed fault*	0.2s	0.1s	×	
F05.19	Detection value of speed deviation	0.0 - 30.0% (F00.02)	20.0%	0.1%	×	
F05.20	Detection time of speed deviation	0.0 - 2.0s *0.0: Not detect the excessive speed deviation fault of motor*	1.0s	0.1s	×	
F05.22	Creeping speed	0.000 - 0.400m/s	0.050m/s	0.001m/s	○	

A

Ref. Code	Function	Setting Range	Default	Unit	Attribute	Setting
F06: Weighing Compensation Parameters, on pages 53 - 54						
F06.00	Pre-torque selection	0: No pre-torque 1: Analogue setting 2: DI setting 3: Digital pre-torque	0	1	×	
F06.01	Up pre-torque bias	0.0 - 100.0%	50.0%	0.1%	×	
F06.02	Down pre-torque bias	0.0 - 100.0%	50.0%	0.1%	×	
F06.03	Up electrical pre-torque gain	0.000 - 9.000	1.000	0.001	×	
F06.04	Up brake pre-torque gain	0.000 - 9.000	1.000	0.001	×	
F06.05	Down electrical pre-torque gain	0.000 - 9.000	1.000	0.001	×	
F06.06	Down brake pre-torque gain	0.000 - 9.000	1.000	0.001	×	
F06.07	Pre-torque digital setting	-100.0 - +100.0%	10.0%	0.1%	×	
F06.08	DI weighing signal 1	0.0 - 100.0%	10.0%	0.1%	×	
F06.09	DI weighing signal 2	0.0 - 100.0%	30.0%	0.1%	×	
F06.10	DI weighing signal 3	0.0 - 100.0%	70.0%	0.1%	×	
F06.11	DI weighing signal 4	0.0 - 100.0%	90.0%	0.1%	×	
F06.19	Operation time when brake closed early	0.000 - 1.999s	0.000s	0.001s	×	
F07: Asyn. Motor Parameters, on pages 54 - 57						
F07.00	Rated power of motor	0.2 - 400.0kW	Depend on HD3L	0.1kW	×	
F07.01	Rated voltage of motor	0V - HD3L rated voltage		1V	×	
F07.02	Rated current of motor	0.0 - 999.9A		0.1A	×	
F07.03	Rated frequency of motor	1.00 - 100.00Hz	50.00Hz	0.01Hz	×	
F07.04	Rated RPM of motor	1 – 24000rpm	1440rpm	1rpm	×	
F07.05	Power factor of motor	0.001 - 1.000	Depend on HD3L	0.001	×	
F07.06	Motor parameter auto-tuning	0: Auto-tuning is disabled 1: Stationary auto-tuning 2: Rotary auto-tuning	0	1	×	
F07.07	Stator resistance of motor	0.000 - 65.535Ω	Depend on HD3L	0.001Ω	×	
F07.08	Rotor resistance of motor	0.000 - 65.535Ω		0.001Ω	×	
F07.09	Leakage inductance of motor	0.0 - 6553.5mH		0.1mH	×	
F07.10	Mutual inductance of motor	0.0 - 6553.5mH		0.1mH	×	
F07.11	Idling excitation current of motor	0.0 - 999.9A		0.1A	×	
F07.12	Core saturation coefficient 1 of motor	0.00 - 0.50 (magnetic flux = 50%)	0.50	0.01	×	
F07.13	Core saturation coefficient 2 of motor	0.00 - 0.75 (magnetic flux = 75%)	0.75	0.01	×	
F07.14	Core saturation coefficient 3 of motor	0.00 - 1.20 (magnetic flux = 120%)	1.20	0.01	×	
F07.15	Motor torque boost	0.1 - 30.0%	0.1%	0.1%	○	

Ref. Code	Function	Setting Range	Default	Unit	Attribute	Setting
F07.16	Torque boost end-point of motor	0.0 - 50.0% (F07.03)	2.0%	0.1%	○	
F07.17	Slip compensation gain of motor	0.0 - 300.0%	100.0%	0.1%	○	
F07.18	Slip compensation filter time of motor	0.1 - 10.0s	0.1s	0.1s	○	
F07.19	Slip compensation limitation of motor	0.0 - 250.0%	200.0%	0.1%	×	
F07.20	AVR function	0: Disabled 1: Enabled all the time 2: Disabled in Dec process	1	1	○	
F07.21	Oscillation-suppression mode of motor	0: Depend on excitation component 1: Depend on torque component	0	1	○	
F07.22	Oscillation-suppression coefficient of motor	0 - 200	100	1	○	
F08: Motor Vector Control Speed-loop Parameters, on pages 57 - 58						
F08.00	Low speed ASR KP	1 - 9999	500	1	○	
F08.01	Low speed ASR KI	0 - 9999	500	1	○	
F08.02	High speed ASR KP	1 - 9999	500	1	○	
F08.03	High speed ASR KI	0 - 9999	500	1	○	
F08.04	ASR PI swithcing frequency 1	0.00 - 50.00Hz	10.00Hz	0.01Hz	○	
F08.05	ASR PI swithcing frequency 2	0.00 - 50.00Hz	15.00Hz	0.01Hz	○	
F08.06	ASR integral limit	0.0 - 200.0% (rated current of motor)	180.0%	0.1%	○	
F08.07	ASR differential time	0.000 - 1.000s *0.000: ASR without differential*	0.000s	0.001s	○	
F08.08	ASR output filter time	0.000 - 1.000s *0.000: ASR without filter*	0.008s	0.001s	○	
F08.09	UP electrical torque limit	0.0 - 200.0% (F07.02)	180.0%	0.1%	×	
F08.10	DN electrical torque limit	0.0 - 200.0% (F07.02)	180.0%	0.1%	×	
F08.11	UP regenerative torque limit	0.0 - 200.0% (F07.02)	180.0%	0.1%	×	
F08.12	DN regenerative torque limit	0.0 - 200.0% (F07.02)	180.0%	0.1%	×	
F12: Digital I/O Terminal Parameters, on pages 58 - 61						
F12.00	Input terminal filter time	0.000 - 2.000s	0.010s	0.001s	×	
F12.01	DI1 function	0: Reserved 1: Controller enabled (EN) 2/3: UP/DN 4 - 6: MS1 - MS3 7: Inspection input (INS) 8: Battery-driven input (BAT) 9: Contactor feedback input (CSM)	1	1	×	
F12.02	DI2 function		2	1	×	

A

Ref. Code	Function	Setting Range	Default	Unit	Attribute	Setting
F12.03	DI3 function	10: Brake feedback input (BSM) 11 - 14: Weighing signal input 1 - 4 (WD1 - WD4) 15: Motor overheat input (OH) 16: Fault reset input (RST) 17: Up forced speed input (UPF) 18: Down forced speed input (DNF) 19: Governor feedback input (OSG) 34: External fault (EXT) *Hundred digit = 0, normally open input selected; = 1, normally closed input selected*	3	1	×	
F12.04	DI4 function		4	1	×	
F12.05	DI5 function		5	1	×	
F12.06	DI6 function		6	1	×	
F12.07	DI7 function		0	1	×	
F12.08	DI8 function		0	1	×	
F12.09	DI9 function		0	1	×	
F12.13	Filter time of multi-speed terminal	0.000 - 2.000s	0.010s	0.001s	×	
F12.15	DO1 function	1: Controller is ready 2: Controller is running 3: Controller is at zero-speed running 4: Zero-speed running 5: Contactor output control 6: Brake output control 7,8: FDT1, FDT2 9: Speed within FAR signal 10: Up signal output 11: Down signal output 12: Under-voltage 13: Unused 14: Controller fault 15: Elevator stop signal	2	1	×	
F12.16	DO2 function		3	1	×	
F12.17	RLY1 function		14	1	×	
F12.18	RLY2 function		0	1	×	
F12.19	RLY3 function		0	1	×	
F12.20	RLY4 function		0	1	×	
F12.21	Output terminal logic setting	Bit0, Bit1: DO1, DO2 output terminal positive/negative logic setting Bit2 - Bit5: RLY1 - RLY4 relay output positive/negative logic setting 0: Positive logic 1: Negative logic	00	1	○	
F13: Analogue I/O Terminal Parameters, on pages 61 - 63						
F13.00	AI1 function	0: Reserved 1: Speed setting 2: Weighing signal 3: Motor overheat signal input (only AI4 enabled)	0	1	×	
F13.01	AI2 function		0	1	×	
F13.02	AI3 function		0	1	×	
F13.03	AI4 function		0	1	×	
F13.04	AI1 bias	-100.0 - +100.0%	0.0%	0.1%	○	
F13.05	AI1 gain	-10.00 - +10.00	1.00	0.01	○	

Ref. Code	Function	Setting Range	Default	Unit	Attribute	Setting
F13.06	AI1 filter time	0.01 - 10.00s	0.05s	0.01s	○	
F13.07	AI2 bias	-100.0 - +100.0%	0.0%	0.1%	○	
F13.08	AI2 gain	-10.00 - +10.00	1.00	0.01	○	
F13.09	AI2 filter time	0.01 - 10.00s	0.05s	0.01s	○	
F13.10	AI3 bias	-100.0 - +100.0%	0.0%	0.1%	○	
F13.11	AI3 gain	-10.00 - +10.00	1.00	0.01	○	
F13.12	AI3 filter time	0.01 - 10.00s	0.05s	0.01s	○	
F13.13	AI4 bias	-100.0 - +100.0%	0.0%	0.1%	○	
F13.14	AI4 gain	-10.00 - +10.00	1.00	0.01	○	
F13.15	AI4 filter time	0.01 - 10.00s	0.05s	0.01s	○	
F13.16	AO1 function	0: Reserved 1: Running speed (0 - max output speed) 2: Setting speed (0 - max output speed) 3: Output current (0 - twice rated current of HD3L) 4: Output voltage (0 - 1.2 times rated voltage of HD3L) 5: DC bus voltage (0 - 2.2 times rated voltage of HD3L) 6: AI1 input (0 - 10V) 7 - 9: AI2 - AI4 input (-10 - +10V/ 0 - 20mA)	0	1	○	
F13.17	AO2 function		0	1	○	
F13.18	AO1 bias	-100.0 - +100.0%	0.0%	0.1%	○	
F13.19	AO1 gain	0.0 - 200.0%	100.0%	0.1%	○	
F13.20	AO2 bias	-100.0 - +100.0%	0.0%	0.1%	○	
F13.21	AO2 gain	0.0 - 200.0%	100.0%	0.1%	○	
F14: SCI Communication Parameters, on page 63						
F14.00	Data format	0: 1-8-2 format, no parity, RTU 1: 1-8-1 format, even parity, RTU 2: 1-8-1 format, odd parity, RTU 3: 1-7-2 format, no parity, ASCII 4: 1-7-1 format, even parity, ASCII 5: 1-7-1 format, odd parity, ASCII	0	1	×	
F14.01	Baud rate	0: 1200bps 1: 2400bps 2: 4800bps 3: 9600bps 4: 19200bps 5: 38400bps	3	1	×	
F14.02	Local address	0 - 247	2	1	×	
F14.03	Host PC response time	0 - 1000ms	0ms	1ms	×	

A

Ref. Code	Function	Setting Range	Default	Unit	Attribute	Setting
F14.04	Detection time of communication timeout	0.0 - 1000.0s *0.0: Not detect at timeout*	0.0s	0.1s	×	
F14.05	Detection time of communication error	0.0 - 1000.0s *0.0: Not detect at error*	0.0s	0.1s	×	
F15: Display Control Parameters, on pages 63 - 64						
F15.00	Language selection	0: Chinese 1: English	0	1	○	
F15.01	Display contrast of the LCD keypad	1 - 10	5	1	○	
F15.02	Set parameter 1 of run status	1: Rated current of HD3L 2: Controller status 3: Operate channel 4: Setting speed 5: Setting speed (after Acc/Dec) 6: Output frequency 7: Setting RPM 8: Running RPM 10: Output voltage 11: Output current 12: Output torque 13: Output power 14: DC bus voltage 15: AI1 voltage 16: AI1 voltage (after calculating) 17: AI2 voltage 18: AI2 voltage (after calculating) 19: AI3 voltage 20: AI3 voltage (after calculating) 21: AI4 voltage 22: AI4 voltage (after calculating) 23,24: AO1, AO2 output 25: Heatsink temperature 26: Input terminal status 27: Output terminal status 28: Modbus state 29: Total time at power on (hour) 30: Total running time (hour)	5	1	○	
F15.03	Set parameter 2 of run status		6	1	○	
F15.04	Set parameter 3 of run status		10	1	○	
F15.05	Set parameter 4 of run status		11	1	○	
F15.06	Set parameter 5 of run status		0	1	○	
F15.07	Set parameter 6 of run status		0	1	○	
F15.08	Set parameter 1 of stop status		4	1	○	
F15.09	Set parameter 2 of stop status		14	1	○	
F15.10	Set parameter 3 of stop status		16	1	○	
F15.11	Set parameter 4 of stop status		26	1	○	
F15.12	Set parameter 5 of stop status		27	1	○	
F15.13	Set parameter 6 of stop status		0	1	○	
F16: Function-boost Parameters, on pages 64 - 66						
F16.00	Zero-speed running signal delay time	0.00 - 10.00s	0.30s	0.01s	×	
F16.01	Zero-speed signal delay time	0.00 - 10.00s	0.30s	0.01s	×	

Ref. Code	Function	Setting Range	Default	Unit	Attribute	Setting
F16.02	Current keep time after stop	0 - 9999ms	0ms	1ms	×	
F16.03	Fan control	0: Auto stop 1: Immediately stop 2: Run when power on	0	1	○	
F16.04	Fan control delay time	0.0 - 600.0s	30.0s	0.1s	○	
F16.05	Brake unit action voltage	220V: 380 - 450V 380V: 630 - 750V	Depend on HD3L	1V	×	
F16.06	Detection time of contactor fault	0.1 - 10.0s	2.0s	0.1s	×	
F16.07	Multi-speed inspection	0 - 7	0	1	×	
F16.08	Zero-speed threshold	0.001 - 0.010m/s	0.003m/s	0.001m/s	○	
F16.09	Selection at motor overheat fault	0: Alarm fault after motor stops 1: Alarm fault at once	0	1	○	
F16.12	Delay time of run output signal	0.00 - 1.00s	0.00s	0.01s	×	
F16.13	UPS running direction auto-determine enable	0: Not enable 1: Enable	0	1	×	
F16.14	Running min. current limit	0 - 100% (F07.11)	20%	1%	×	
F16.15	Running min. detection time	0.0 - 5.0s	0.0s	0.1s	×	
F16.16	Governor fault detection time	0.0 - 2.0s	1.0s	0.1s	×	
F16.17	DC braking current at stop	0 - 150%	100%	1%	×	
F16.18	Starting frequency of DC braking current at stop	0.20 - 10.00Hz	0.50Hz	0.01Hz	×	
F16.19	Brake release frequency	0.00 - 10.00Hz	0.00Hz	0.01Hz	×	
F17: Fault Protect Parameters, on pages 66 - 68						
F17.00	Input voltage at motor overheat	0.00 -10.00V	0.00V	0.01V	×	
F17.01	Thermistor type	0: Not detect the motor overheat 1: Positive charateristic 2: Negative charateristic	0	1	×	
F17.02	Threshold resistance at motor overheat	0.0 - 10.0kΩ	5.0kΩ	1.0kΩ	×	
F17.03	The detection base of lack of input	0 - 100% (HD3L rated voltage)	30%	1%	×	
F17.04	The detection time of lack of input	0.0 - 5.0s	1.0s	1.0s	×	
F17.05	The detection base of lack of output	0 - 100% (HD3L rated current)	20%	1%	×	
F17.06	The detection time of lack of output	0.0 - 20.0s	3.0s	1.0s	×	
F17.07	Motor overload protect factor	20.0 - 110.0%	100.0%	1.0%	×	
F17.08	Fault auto reset times	0 - 100 *0: No auto-reset function*	0	1	×	

A

Ref. Code	Function	Setting Range	Default	Unit	Attribute	Setting
F17.09	Fault auto reset interval	2.0 - 20.0s/times	5.0s/times	0.1s/times	×	
F17.10	Faulty relay action	Unit: In auto reset process Ten: In undervoltage process 0: Faulty relay doesn't act 1: Faulty relay acts	00	1	○	
F17.11	NO.5 fault type	-Lu-: DC bus undervoltage E0001: Acc overcurrent E0002: Dec overcurrent E0003: Constant speed overcurrent E0004: Acc over voltage E0005: Dec over voltage E0006: Constant speed over voltage E0008: Power module fault E0009: Heatsink overheated E0010: Braking unit fault E0011: CPU fault E0012: Parameter auto-tuning fault E0013: Soft start contactor failed E0014: Current detection fault E0015: Input voltage phase loss E0016: Output voltage phase loss E0017: Controller overload E0018: Excessive speed deviation E0019: Motor overload E0020: Motor overheat E0021: Read/write fault of control board EEPROM E0022: Read/write fault of keypad EEPROM (display on the keypad only, HD3L does not protect it) E0023: Faulty setting of parameters E0024: Fault of external equipment E0025: Too small running current E0028: SCI ommunication timeout E0029: SCI communication error E0032: Motor over speed E0036: Contator fault	0	1	*	

Ref. Code	Function	Setting Range	Default	Unit	Attribute	Setting
F17.11	NO.5 fault type	E0037: Governor fault *E0008, E0010, E0013, E0014, E0021, E0022, E0024, E0036 can't auto reset*	0	1	*	
F17.12	Setting freqency at NO.5 fault	0.00 - 100.00Hz	0.00Hz	0.01Hz	*	
F17.13	Output freqency at NO.5 fault	0.00 - 100.00Hz	0.00Hz	0.01Hz	*	
F17.14	DC bus vlotage at NO.5 fault	0 - 999V	0V	1V	*	
F17.15	Output voltage at NO.5 fault	0 - 999V	0V	1V	*	
F17.16	Output current at NO.5 fault	0.0 - 999.9A	0.0A	0.1A	*	
F17.17	Input terminal status at NO.5 fault	0 - 0x1FF	0	1	*	
F17.18	Output terminal status at NO.5 fault	0 - 0x3F	0	1	*	
F17.19	NO.5 fault interval	0.0 - 6553.5h	0.0h	0.1h	*	
F17.20	NO.4 fault type	0 - 36	0	1	*	
F17.21	NO.4 fault interval	0.0 - 6553.5h	0.0h	0.1h	*	
F17.22	NO.3 fault type	0 - 36	0	1	*	
F17.23	NO.3 fault interval	0.0 - 6553.5h	0.0h	0.1h	*	
F17.24	NO.2 fault type	0 - 36	0	1	*	
F17.25	NO.2 fault interval	0.0 - 6553.5h	0.0h	0.1h	*	
F17.26	NO.1 fault type	0 - 36	0	1	*	
F17.27	NO.1 fault interval	0.0 - 6553.5h	0.0h	0.1h	*	
F18: PWM Parameters, on page 68						
F18.00	Carrier frequency	1 - 16kHz	Depend on HD3L	1kHz	×	
F18.01	Carrier freqency auto adjust selection	0: Reserved 1: Enable	0	1	×	
F18.02	PWM overmodulation enable	0: Disenable 1: Enable	1	1	×	
F18.03	PWM overmodulation mode	0: Two/three phase swtich 1: Three phase	0	1	×	
F19: Enhancement Parameter Group 1, **on page 68**						
F19.09	Frequency and speed switch selection	0: The given way is speed (m/s) 1: The given way is frequency (Hz)	0	1	×	
F19.10	Multi-speed frequency 0	0.00Hz - F00.03	0.00Hz	1.00Hz	○	
F19.11	Multi-speed frequency 1	0.00Hz - F00.03	0.00Hz	1.00Hz	○	
F19.12	Multi-speed frequency 2	0.00Hz - F00.03	0.00Hz	1.00Hz	○	
F19.13	Multi-speed frequency 3	0.00Hz - F00.03	0.00Hz	1.00Hz	○	
F19.14	Multi-speed frequency 4	0.00Hz - F00.03	0.00Hz	1.00Hz	○	
F19.15	Multi-speed frequency 5	0.00Hz - F00.03	0.00Hz	1.00Hz	○	
F19.16	Multi-speed frequency 6	0.00Hz - F00.03	0.00Hz	1.00Hz	○	

A

Ref. Code	Function	Setting Range	Default	Unit	Attribute	Setting
F19.17	Multi-speed frequency 7	0.00Hz - F00.03	0.00Hz	1.00Hz	○	
F19.18	Maintenance operation frequency	0.00Hz - F00.03	0.00Hz	1.00Hz	○	
F19.19	Emergency operation frequency	0.00Hz - F00.03	0.00Hz	1.00Hz	○	
F19.20	Start operation frequency	0.00Hz - F00.03	0.00Hz	1.00Hz	○	
F19.44	SVC5 mode	0: Formal mode 1: Optimization mode	1	1	×	
F19.50	Low-speed variable carrier enable	0: Disenable 1: Enable	1	1	×	
F19.51	Overload protection percentage of motor	150 - 200%	170%	1%	×	
F19.52	Overload protection time of motor	0 - 3: Disenable 4 - 10: Protection	5s	1s	×	
F19.53	Modify automaticly updated mutual inductance of no-load current	0: Change automatically 1: No change automatically	0	1	×	
F19.55	Enable about the compensation gains of the electric and power generation slip are compensated separately	0: Disenable 1: Enable	1	1	×	
F19.56	Motorized slip compensation gain	200.0 - 20.0%	100.0%	0.1%	×	
F19.57	Power generation slip compensation gain	200.0 - 20.0%	100.0%	0.1%	×	
F19.63	Start DC when emergency operation	50 - 100%	100%	1%	×	
F19.64	Start DC brake time when emergency operation	0.0 - 3.0s	0.5s	0.1s	×	
F19.65	Stop DC when emergency operation	50 - 100%	100%	1%	×	
F19.66	Stop DC brake time when emergency operation	0.0 - 3.0s	1.5s	0.1s	×	
F19.67	Current search and torque limit when emergency operation	40.0 - 200.0%	100.0%	0.1%	×	
F19.68	Torque boost when emergency operation	0.1 - 30.0%	0.1%	0.1%	×	
F19.69	Torque boost cut-off point when emergency operation	0.1 - 50.0% (F07.03)	40.0%	0.1%	×	
F19.70	VF output rated voltage percentage when emergency operation	60.0 - 100.0%	100.0%	0.1%	×	
F19.88	SVC6 I/F control enable	0: Forbidden 1: Enable	1	1	×	

Ref. Code	Function	Setting Range	Default	Unit	Attribute	Setting
F19.89	SVC6 I/F control frequency cut-off point	2.00 - 10.00Hz	4.00Hz	0.01Hz	×	
F19.90	Given SVC6 I/F control torque	0 - 200%	100%	1%	×	
F19.96	SVC6 I/F control transition optimization	0: Normal processing 1: Optimization	1	1	×	
F20: Increase Parameters Group 2 on page 69						
F20.00	Start DC brake current	50 - 150%	100%	1%	×	
F20.01	Duration of start DC brake current	0.0 - 3.0s	0.5s	0.1s	×	
F20.02	DI enable function selection	0: Original plan 1: New plan	0	1	×	
F20.03	Open time of output contactor	0: Keep open 1 - 9: After the directional signal contactor opens for F20.03, the output contactor is closed after the enable signal is still invalid	0	1	×	
F20.04	Ground detection before running	0: Detection 1: No detection	0	1	×	
F20.05	Brake open frequency	0.00 - 10.00Hz	0.00Hz	0.01Hz	×	
F20.06	Brake open current	0 - 150% (motor rated current)	50%	1%	×	
F20.07	Restore customized parameters	0 - 9	0	1	×	
F20.13	Torque limited when emergency operation	70.0 - 200.0%	120.0%	0.1%	×	
F20.14	UPS operation undervoltage point setting	170 - 220V	190V	1V	×	
F20.15	Emergency operation parameters	Unit: Reserved Ten: Torque limited when emergency operation 0: F20.19 no functional 1: F20.19 functional Hundred: Emergency operation mode determine 0: F00.01 ok 1: VF control	0	1	×	
F20.17	Search speed of light load current method when emergecy operation	0.020 - 0.200m/s	0.150m/s	0.001m/s	×	
F20.18	Search time of light-load current method when emergency operation	0.300 - 3.000m/s	1.000m/s	0.001m/s	×	
F20.19	Torque limited when emergency operation	70.0 - 200.0%	100.0%	0.1%	×	

A